VISOTTICACOMOTEC

Neutral plastic insert

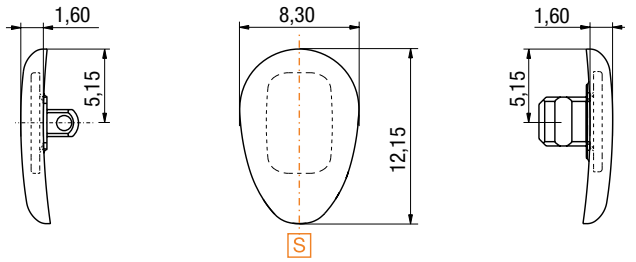

STANDARD
SLIM Pad
SCREW SYSTEM: 71NPC7896A1WYX
CLICK SYSTEM: 71NPC7897A1WYX
Shape: 3
Material: Soft MPM Crystal Cold
Insert: PC insert "C Shape"

ALTERNATIVE
Material: Soft MPM Crystal Warm - MOQ 20,000 pairs

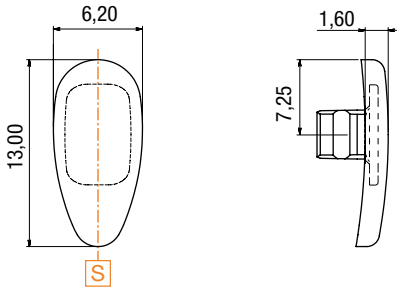

STANDARD
SLIM Pad
CLICK SYSTEM: 71NPC7898A1WYX
Shape: 27
Material: Soft MPM Crystal Cold
Insert: PC insert "C Shape"

ALTERNATIVE
Material: Soft MPM Crystal Warm - MOQ 20,000 pairs

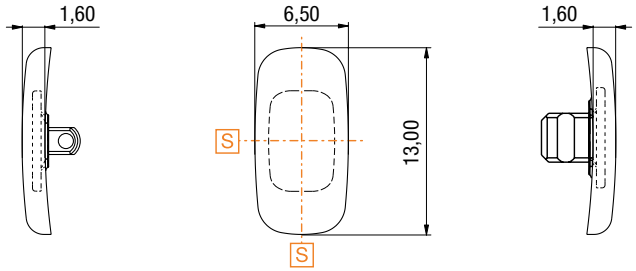

STANDARD
SLIM Pad
SCREW SYSTEM: 71NPC7900A1WYX
CLICK SYSTEM: 71NPC7899A1WYX
Shape: 4
Material: Soft MPM Crystal Cold
Insert: PC insert "C Shape"

ALTERNATIVE
Material: Soft MPM Crystal Warm - MOQ 20,000 pairs

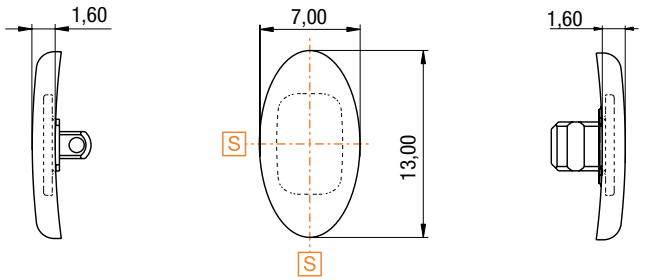

STANDARD
SLIM Pad
SCREW SYSTEM: 71NPC7901A1WYX
CLICK SYSTEM: 71NPC7902A1WYX
Shape: 13
Material: Soft MPM Crystal Cold
Insert: PC insert "C Shape"

ALTERNATIVE
Material: Soft MPM Crystal Warm - MOQ 20,000 pairs

All rights reserved · © copyright Visottica · 2019 · Rev.1 - For most updated information, visit our website **www.visotticacomotec.com**

VISOTTICACOMOTEC

Neutral plastic insert

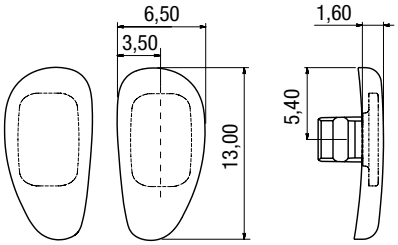

STANDARD
SLIM Pad
CLICK SYSTEM: 71NPC7911A1WY0
Shape: 26
Material: Soft MPM Crystal Cold
Insert: PC insert "C Shape"

ALTERNATIVE
Material: Soft MPM Crystal Warm - MOQ 20,000 pairs

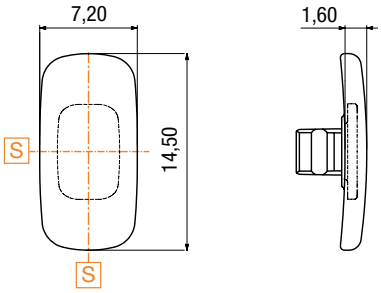

STANDARD
SLIM Pad
CLICK SYSTEM: 71NPC7912A1WYX
Shape: 32
Material: Soft MPM Crystal Cold
Insert: PC insert "C Shape"

ALTERNATIVE
Material: Soft MPM Crystal Warm - MOQ 20,000 pairs

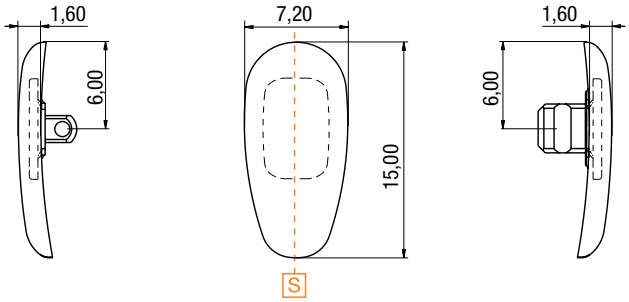

STANDARD
SLIM Pad
SCREW SYSTEM: 71NPC7914A1WYX
CLICK SYSTEM: 71NPC7913A1WYX
Shape: 15
Material: Soft MPM Crystal Cold
Insert: PC insert "C Shape"

ALTERNATIVE
Material: Soft MPM Crystal Warm - MOQ 20,000 pairs

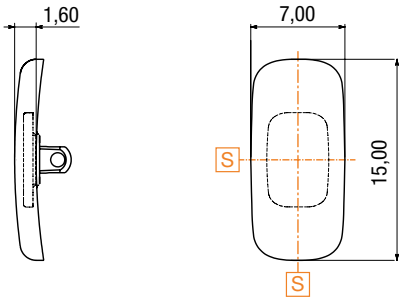

STANDARD
SLIM Pad
SCREW SYSTEM: 71NPC7915A1WYX
Shape: 25
Material: Soft MPM Crystal Cold
Insert: PC insert "C Shape"

ALTERNATIVE
Material: Soft MPM Crystal Warm - MOQ 20,000 pairs

All rights reserved · © copyright Visottica · 2019 · Rev.1 - For most updated information, visit our website **www.visotticacomotec.com**

VISOTTICACOMOTEC

Neutral plastic insert

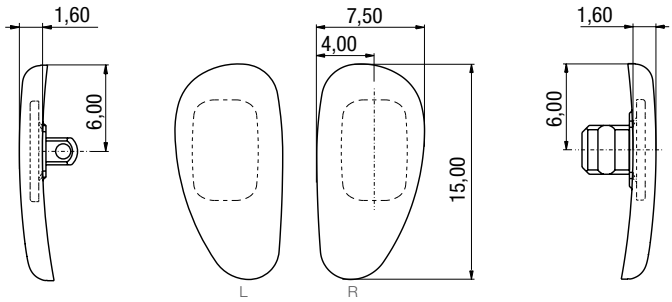

STANDARD
SLIM Pad

SCREW SYSTEM: 71NPC7916A1WY0
CLICK SYSTEM: 71NPC7917A1WY0

Shape: 1

Material: Soft MPM Crystal Cold
Insert: PC insert "C Shape"

ALTERNATIVE

Material: Soft MPM Crystal Warm - MOQ 20,000 pairs

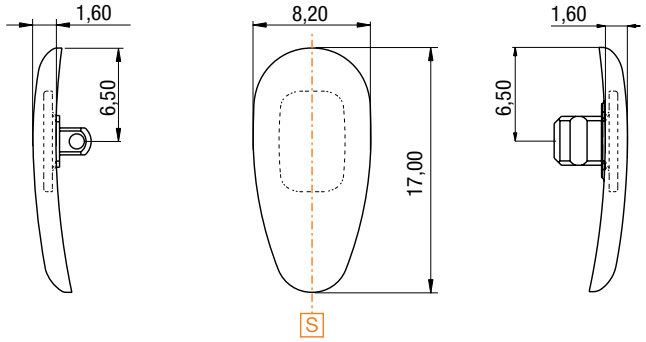

STANDARD
SLIM Pad

SCREW SYSTEM: 71NPC7918A1WYX
CLICK SYSTEM: 71NPC7919A1WYX

Shape: 24

Material: Soft MPM Crystal Cold
Insert: PC insert "C Shape"

ALTERNATIVE

Material: Soft MPM Crystal Warm - MOQ 20,000 pairs

All rights reserved · © copyright Visottica · 2019 · Rev.1 - For most updated information, visit our website **www.visotticacomotec.com**

VISOTTICACOMOTEC

Neutral plastic insert

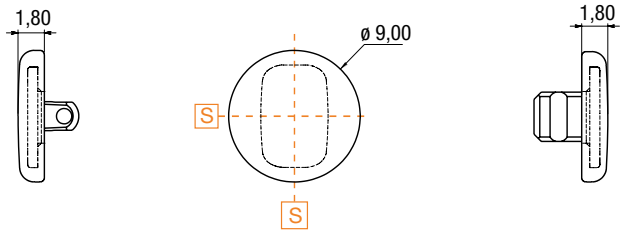

STANDARD
SOFT Pad
SCREW SYSTEM: 71NPC7920A1WYX
CLICK SYSTEM: 71NPC7921A1WYX
Shape: 30
Material: Soft MPM Crystal Cold
Insert: PC insert "C Shape"

ALTERNATIVE
Material: Soft MPM Crystal Warm - MOQ 20,000 pairs

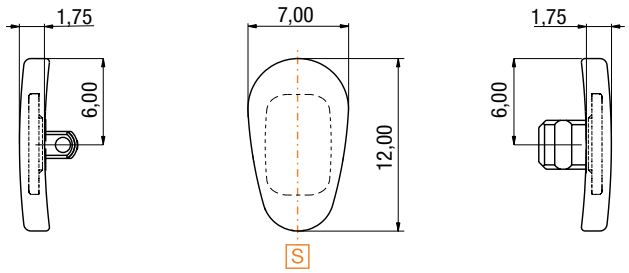

STANDARD
SOFT Pad
SCREW SYSTEM: 71NPC7922A1WYX
CLICK SYSTEM: 71NPC7923A1WYX
Shape: 2
Material: Soft MPM Crystal Cold
Insert: PC insert "C Shape"

ALTERNATIVE
Material: Soft MPM Crystal Warm - MOQ 20,000 pairs

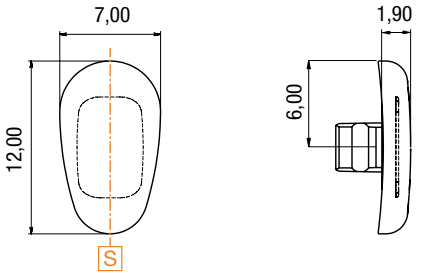

STANDARD
SOFT Pad
CLICK SYSTEM: 71NPC7924A1WYX
Shape: 5
Material: Soft MPM Crystal Cold
Insert: PC insert "C Shape"

ALTERNATIVE
Material: Soft MPM Crystal Warm - MOQ 20,000 pairs

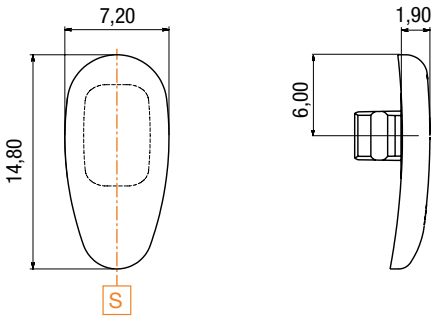

STANDARD
SOFT Pad
CLICK SYSTEM: 71NPC7925A1WYX
Shape: 6
Material: Soft MPM Crystal Cold
Insert: PC insert "C Shape"

ALTERNATIVE
Material: Soft MPM Crystal Warm - MOQ 20,000 pairs

All rights reserved · © copyright Visottica · 2019 · Rev.1 - For most updated information, visit our website **www.visotticacomotec.com**

VISOTTICACOMOTEC

Neutral plastic insert

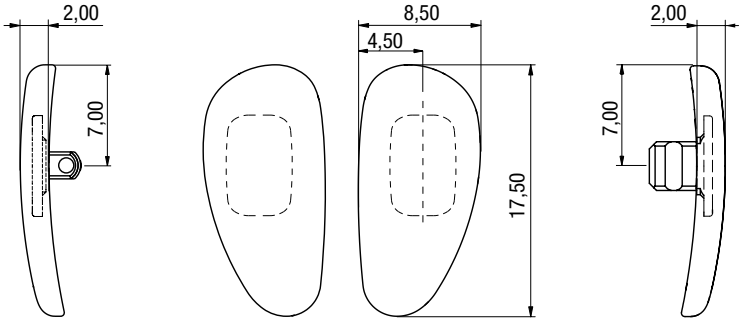

STANDARD
SOFT Pad
SCREW SYSTEM: 71NPC7927A1WY0
CLICK SYSTEM: 71NPC7928A1WY0
Shape: 14
Material: Soft MPM Crystal Cold
Insert: PC insert "C Shape"

ALTERNATIVE
Material: Soft MPM Crystal Warm - MOQ 20,000 pairs

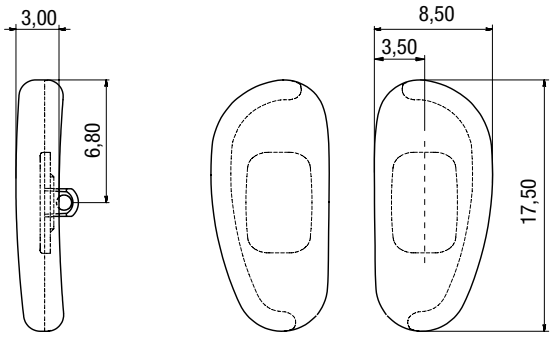

STANDARD
SOFT Pad
SCREW SYSTEM: 71NPC7929A1WY0
Shape: 31
Material: Soft MPM Crystal Cold
Insert: PC insert "C Shape"

ALTERNATIVE
Material: Soft MPM Crystal Warm - MOQ 20,000 pairs

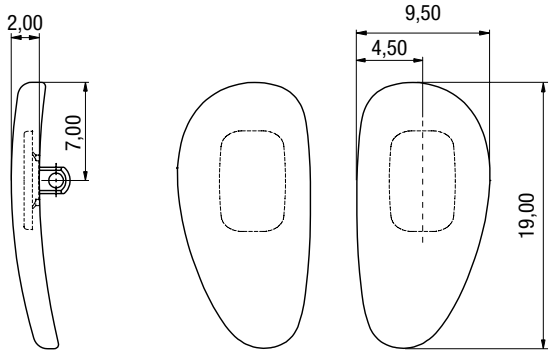

STANDARD
SOFT Pad
SCREW SYSTEM: 71NPC7930A1WY0
Shape: 29
Material: Soft MPM Crystal Cold
Insert: PC insert "C Shape"

ALTERNATIVE
Material: Soft MPM Crystal Warm - MOQ 20,000 pairs

All rights reserved · © copyright Visottica · 2019 · Rev.1 - For most updated information, visit our website **www.visotticacomotec.com**