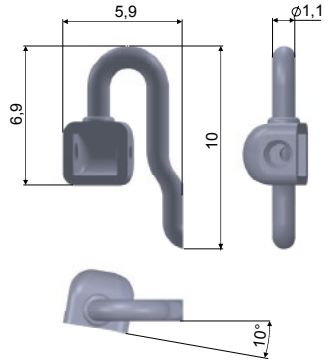

SCREW SYSTEM: 31PD90550000
Stem code: OA7579
Stem shape: 214
Stem ø 1.10
Stem alloy Titanium
NORMAL BOX
Box alloy Titanium
Slanted box 10°

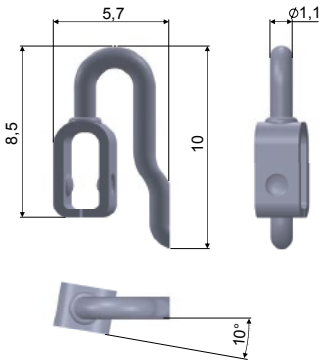

CLICK SYSTEM: 31PD91283000
Stem code: OA7579
Stem shape: 214
Stem ø 1.10
Stem alloy Titanium
NORMAL BUCKLE
Buckle alloy Titanium
Slanted box 10°

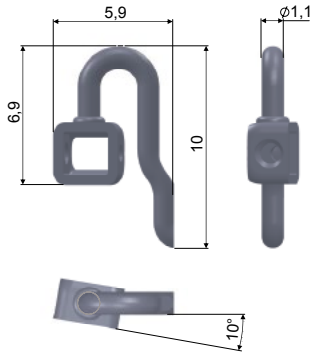

SCREW SYSTEM: 31PD90584000
Stem code: OA7579
Stem shape: 214
Stem ø 1.10
Stem alloy Titanium
MINIBOX
Minibox alloy Titanium
Slanted minibox 10°

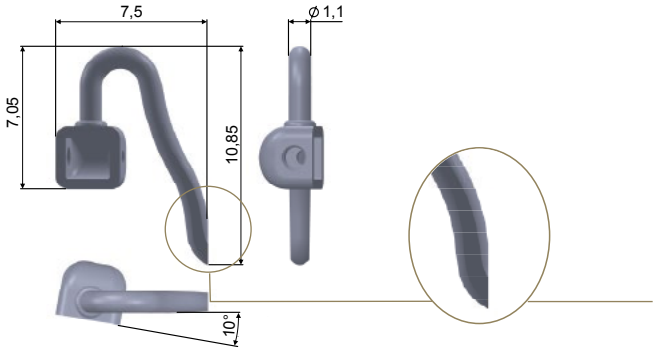

SCREW SYSTEM: 31PD90435000
Stem code: OA7567
Stem shape: 225
Stem ø 1.10
Stem alloy Titanium
NORMAL BOX
Box alloy Titanium
Slanted box 10°
STAMPED STEM 0.9 mm AT THE END

All rights reserved · © copyright Visottica · 2019 · Rev.0 - For most updated information, visit our website **www.visotticacomotec.com**