comfort for the vision

2018

visotticacomotec.com

VISOTTICACOMOTEC

TECH COUTURE

GENERAL INFORMATION

MATERIAL SPECIFICATIONS 06
PERSONALIZATION RANGE 08
INSERT DRAWINGS 10
ORIENTATION SYSTEM 11

SYNOPTIC INDEX 12

NOSE PADS

SCREW CLICK

PC MATERIAL
no insert 18

PVC MATERIAL
no insert 19
no insert 22
plastic insert 23
plastic insert - Twin Pad 28

PLUG-IN

MPM MEDICAL PVC MATERIAL
plastic insert 29
plastic insert - Twin Pad 34
zamak insert 35
zamak insert- Twin Pad 40

MSM MEDICAL SILICONE MATERIAL
plastic insert 41
plastic insert - Twin Pad 45
plastic insert "U" 46
no insert 48

BUTTON

GENERAL INFORMATION 51

PAD ARMS

SYNOPTIC INDEX 52

LEVEL 1
Nickel Silver 18% Ni 58
Nickel Silver 32% Ni 62
Monel 64
Titanium 65
Nickel Silver 18% Ni · For plastic frame 67

LEVEL 2 **Do It Yourself** 70

LEVEL 3 **Customized Products** 72

NOSE PADS

MATERIAL SPECIFICATIONS

In this catalogue you will find a complete range of nose pads, that you can easily select, depending on your different requirements

- Method of assembly:
  SCREW
  CLICK
  PLUG IN
  BUTTON

- Different materials:
  PC
  PVC
  MPM Medical PVC Material
  MSM Medical Silicone Material

- Wide choice of **different shapes**, in **different dimensions and thickness**

- Different Inserts:
  Plastic
  Zamak

- A variety of personalizations available

GRAPHIC COMPARISON OF HARDNESS

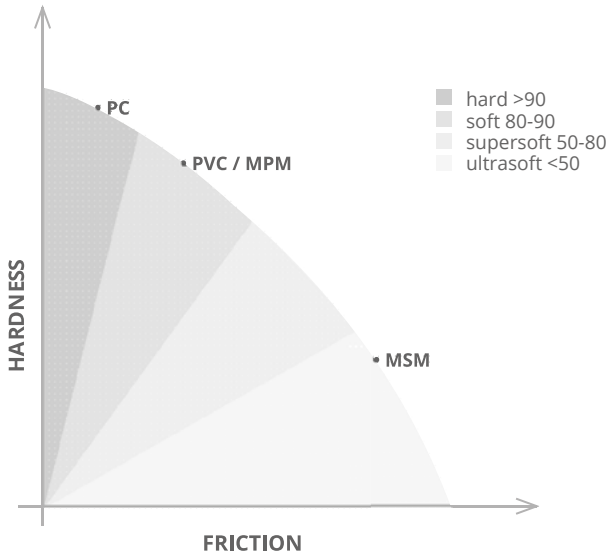

Besides offering our line of products from the standard catalogue, we are always open to customization to meet your specific needs

MATERIAL FEATURES AND BENEFITS

PC
- Perfect clear appearance
- Highly transparent
- Clean and easy to clean under water
- Highly smooth surface
- Long-lasting lifetime
- Skin friendly, hypoallergenic, biocompatible

PVC
- Highly clear appearance
- Clean and easy to clean under water
- Highly smooth surface
- Soft for better comfort
- UV resistant treated
- Long-lasting lifetime
- Wide choice of shapes and thickness
- Skin friendly, hypoallergenic, biocompatible

MPM - MEDICAL PVC MATERIAL
In addition to the above PVC features and benefits:
- First quality PVC compounds for medical applications according with United States Pharmacopeia standard
- A variety of personalizations available

MSM - MEDICAL SILICONE MATERIAL
- Pure crystal clear silicone appearance
- Increased comfort thanks to:
  · Highly smooth and soft material
  · Flexible edges
  · Anti-sliding effect
- Skin friendly, hypoallergenic, biocompatible
- Longer life time due to our exclusive PCS (Perfect Clear System)
- Wide choices of shapes, thickness and inserts
- A variety of personalizations available

All rights reserved · © copyright Visottica · 2018 · Rev.1 - For most updated information, visit our website **www.visotticacomotec.com**

The NOSE PADS supplied from Visottica Comotec are offering you comfort, reliability and international standards of safety. In particular the nose pads are in compliance with:

1. REACH
It's a regulation of the European Union, adopted to improve the protection of human health and the environment from the risks that can be posed by chemicals, while enhancing the competitiveness of the EU chemicals industry.

2. CPSIA
The Consumer Product Safety Improvement Act (CPSIA) of 2008 is a United States law signed on August 14, 2008. The legislation defines test requirements and new levels of acceptance for many common substances, such as Lead and Phthalates.

3. PROP 65
"The Safe Drinking Water and Toxic Enforcement Act of 1986", better known as "Proposition 65" or "PROP.65", is a California State law that requires businesses to notify consumers in California when products contain substances that have been determined to cause cancer, birth defects or other reproductive harm.

4. ISO 12870
ISO 12870:2016 specifies fundamental requirements for unglazed spectacle frames designed for use with all prescription lenses. It is applicable to frames when sold by the manufacturer or a supplier to the retailer.

- Inside the ISO 12870 the paragraph 4.4.2 explain the «General physiological compatibility». To measure the BIOCOMPATIBILITY of its products, Visottica S.p.A. has applied this test: ISO 10993 - "Biological Evaluation of Medical Devices". It is the international reference standard for the biological evaluation of medical devices and consists of three tests to be passed in order to confirm the biocompatibility of the finished product.

To be defined as MEDICAL GRADE MATERIAL, a substance needs to be compliant with the previous regulation AND with:

- **USP CLASS VI:** is a United States Pharmacopeia standard which consists of a series of screening tests to characterize the basic biocompatibility of the plastic under investigation. The three tests of the USP Class VI allow to analyse the biocompatibility of the plastic material:
  - **Acute systemic toxicity:** the purpose of this test is to determine the irritant effect of toxic leachables present in extracts of test materials
  - **Intracutaneous injection/reactivity:** the purpose of this test is to evaluate the potentials of materials to cause irritation on the exposed part of the body.
  - **Implantation:** the purpose of this test is to evaluate the reaction of living tissue to the plastic.

BISPHENOL A AND INTERNATIONAL REGULATIONS

Bisphenol A (CAS n° 80-05-7) is an organic synthetic compound which is mainly employed to make certain plastics and epoxy resins. Among these, BpA is used as a monomeric building block for the manufacture of Polycarbonate resin. Unavoidable technically trace levels (typically less than 100 ppm, parts per million) may remain in the polymer matrix of all Polycarbonate resins (so-called free or residual BpA) and, therefore, trace levels of BpA can be present also in all Polycarbonate articles.
Following several external laboratory tests on PC insert the results have remarked that, under normal conditions of use, Polycarbonate components used in the nose pads perfectly comply with BpA content limits fixed by European REACh Regulation and California Prop. 65.

All declaration of compliance are downloadable from our website: **www.visotticacomotec.com**

All rights reserved · © copyright Visottica · 2018 · Rev.1 - For most updated information, visit our website **www.visotticacomotec.com**

IP
Ink Printing on transparent plastic insert

Logo
Red 186C
Black 594C
Gray 9C
Blue 295C
Green 343C

• Other colours on request

HS
Hot Stamping

Positive effect logo on transparent

Logo
Matt Gold
Matt Silver
Shiny Gold
Shiny Silver

Negative effect logo on transparent

Background
Matt Gold
Matt Silver
Shiny Gold
Shiny Silver

IPHS
Ink Printing on Hot Stamping

Background
Matt Gold
Matt Silver
Shiny Gold
Shiny Silver

Logo
Red 186C
Black 594C
Gray 9C
Blue 295C
Green 343C

• Other colours on request

All rights reserved · © copyright Visottica · 2018 · Rev.1 - For most updated information, visit our website **www.visotticacomotec.com**

DHS
Double Hot Stamping

Combinations available

Background	Logo
Matt Gold	Shiny Gold
Matt Gold	Shiny Silver
Matt Silver	Shiny Gold
Matt Silver	Shiny Silver

HSE
Hot Stamping Engraving

Logo in relief, on transparent plastic insert

Logo
Matt Gold
Matt Silver
Shiny Gold
Shiny Silver

Logo in hollow, visible by transparency

Background
Matt Gold
Matt Silver
Shiny Gold
Shiny Silver

Logo in hollow, visible by transparency on partially transparent plastic insert

Background
Matt Gold
Matt Silver
Shiny Gold
Shiny Silver

GPI
Galvanized Plastic Insert
with logo in relief-hollow on matt-shiny combination

Colours
Gold
Silver
Gun

All rights reserved · © copyright Visottica · 2018 · Rev.1 - For most updated information, visit our website **www.visotticacomotec.com**

INSERT DRAWINGS

PERSONALIZATION AREA OF
STANDARD INSERT
“C SHAPE”

• Neutral PC Insert for PVC Pad
• Personalized PC Insert for MPM Pad

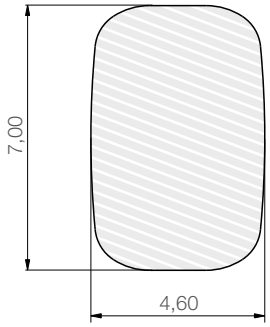

PERSONALIZATION AREA OF
STANDARD INSERT
“U SHAPE”

• Personalized PC Insert for Silicone Pad

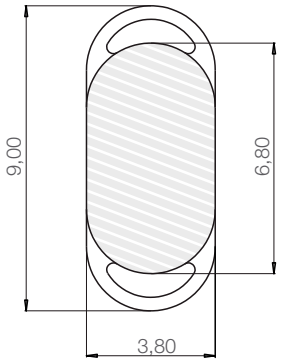

PERSONALIZATION AREA OF
STANDARD INSERT
“V SHAPE - DVP01”

• Neutral PC and personalized PC Insert for MPM Pad
• MOQ of 200,000 pairs

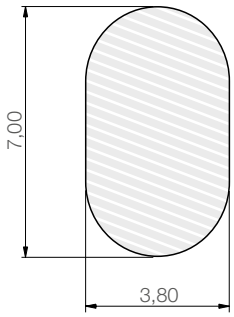

All rights reserved · © copyright Visottica · 2018 · Rev.1 - For most updated information, visit our website **www.visotticacomotec.com**

ORIENTATION SYSTEM

NOT ORIENTED

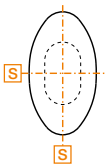

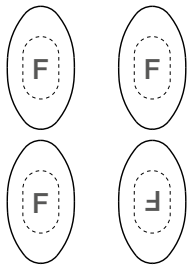

EQUALLY DIRECTED LOGO
SYMMETRICAL PAD

DIFFERENTLY DIRECTED LOGO
SYMMETRICAL PAD

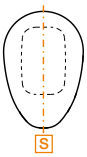

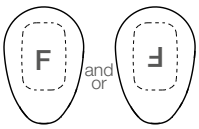

NOT DIRECTED LOGO
SYMMETRICAL PAD

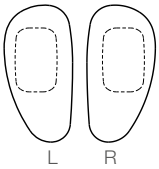

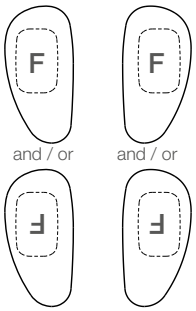

NOT DIRECTED LOGO
SYMMETRICAL INSERT
L&R PAD

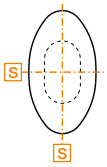

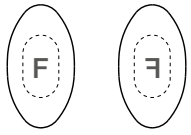

MIRROR DIRECTED LOGO
L&R INSERT & PAD

ORIENTED

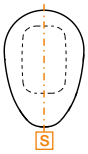

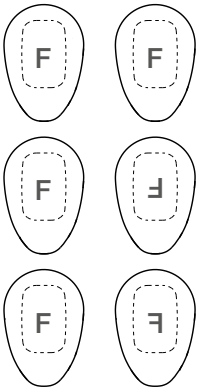

EQUALLY DIRECTED LOGO
SYMMETRICAL PAD

DIFFERENTLY DIRECTED LOGO
SYMMETRICAL INSERT L&R PAD

MIRROR DIRECTED LOGO
L&R INSERT & PAD

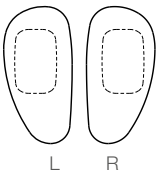

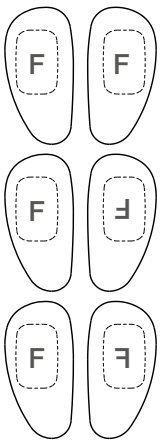

EQUALLY DIRECTED LOGO
SYMMETRICAL INSERT L&R PAD

DIFFERENTLY DIRECTED LOGO
SYMMETRICAL INSERT L&R PAD

MIRROR DIRECTED LOGO
L&R INSERT & PAD

All rights reserved · © copyright Visottica · 2018 · Rev.1 - For most updated information, visit our website **www.visotticacomotec.com**

SYNOPTIC INDEX

Shape	Thickness	Type	PC MATERIAL	PVC MATERIAL	MPM MEDICAL PVC MATERIAL	MSM MEDICAL SILICONE MATERIAL
	1,40	BUTTON System				73NP91511000 (p. 48)
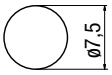	1,80	SCREW System				73NP93131000 (p. 42)
		CLICK System				73NP93134000 (p. 42)
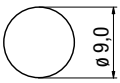	1,40	SCREW System		71NP90596000 (p. 19)		
						73NP93137000 (p. 41)
	1,50	CLICK System				73NP93140000 (p. 41)
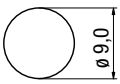	1,80	SCREW System		71NPB0939A1WYX (p. 25)		
	2,00					73NP90644000 (p. 42)
	1,80	CLICK System		71NP91040000 (p. 25)		
	2,00					73NP91269000 (p. 42)
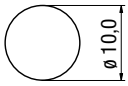	1,80	BUTTON System				73NP91259000 (p. 48) 73NP93014000 (p. 48)
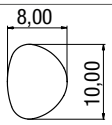	1,10	SCREW System		71NP91047000 (p. 19)		
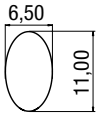	1,50	SCREW System				73NP93501000 (p. 46) 73NP93011000 (p. 41)
		CLICK System				73NP93496000 (p. 46) 73NP93010000 (p. 41)
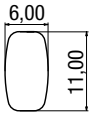	1,70	BUTTON System				73NP93151000 (p. 48)
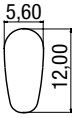	1,60	SCREW System			71NPB0923A1WNX (p. 35) 71NPB0923A1WDX (p. 35)	
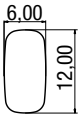	1,40	SCREW System		71NP90422000 (p. 20)		
		CLICK System		71NP90500000 (p. 20)		
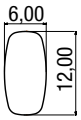	1,40	SCREW System		71NPB0744A1WYX (p. 20)		

All rights reserved · © copyright Visottica · 2018 · Rev.1 - For most updated information, visit our website **www.visotticacomotec.com**

Shape	Thickness	Type	PC MATERIAL	PVC MATERIAL	MPM MEDICAL PVC MATERIAL	MSM MEDICAL SILICONE MATERIAL
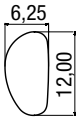	1,60	SCREW System			71NP91867000 (p. 35) 71NP91867A1WDO (p. 35)	
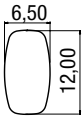	1,60	SCREW System			71NPB0924A1WNX (p. 35) 71NPB0924A1WDX (p. 35)	
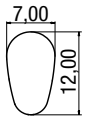	1,75	SCREW System		71NP90398000 (p. 26)	71NPB0922A1WNX (p. 38) 71NPB0922A1WDX (p. 38)	
	2,00					73NP93500000 (p. 47)
	1,75	CLICK System		71NP91048000 (p. 26)		
	1,90			71NPB1011A1WYX (p. 26)		
	2,00					73NP93499000 (p. 47)
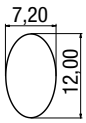	1,35	SCREW System		71NP90595000 (p. 19)		
	1,45	CLICK System		71NP90643000 (p. 19)		
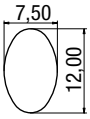	1,80	SCREW System				73NP93505000 (p. 47)
		CLICK System				73NP93498000 (p. 47)
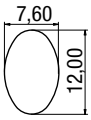	1,20	SCREW System	74NPC4073A1WYX (p. 18)			
		CLICK System	74NPC4077A1WYX (p. 18)			
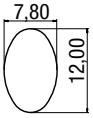	1,80	BUTTON System				73NP93145000 (p. 48)
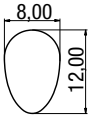	1,20	SCREW System		71NP90523000 (p. 19)		
	1,60			71NP90451000 (p. 20)		
	1,20	CLICK System		71NP90419000 (p. 19)		
	1,60			71NP90980000 (p. 20)		
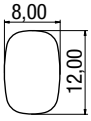	2,00	SCREW System				73NP93007000 (p. 42)
		CLICK System				73NP93006000 (p. 42)
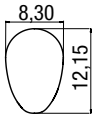	1,60	SCREW System		71NP90525000 (p. 23)	71NP91034000 (p. 35) 71NP91507000 (p. 35)	
		CLICK System		71NP90443000 (p. 23)		

All rights reserved · © copyright Visottica · 2018 · Rev.1 - For most updated information, visit our website **www.visotticacomotec.com**

SYNOPTIC INDEX

Shape	Thickness	Type	PC MATERIAL	PVC MATERIAL	MPM MEDICAL PVC MATERIAL	MSM MEDICAL SILICONE MATERIAL
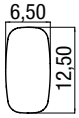	1,70	BUTTON System				73NPB0956A1WYX (p. 48)
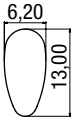	1,60	CLICK System		71NPB0925A1WYX (p. 23)		
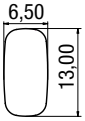	1,60	SCREW System		71NP90507000 (p. 21) 71NP90412000 (p. 23)	71NPB0926A1WNX (p. 36) 71NPB0926A1WDX (p. 36)	
		CLICK System		71NP91709000 (p. 21) 71NP92163000 (p. 23)		
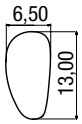	1,60	CLICK System		71NPB0927A1WY0 (p. 24)		
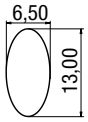	1,50	SCREW System				73NP93502000 (p. 46) 73NP93013000 (p. 41)
		CLICK System				73NP93504000 (p. 46) 73NP93012000 (p. 41)
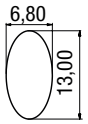	1,10	SCREW System	74NPC4076A1WYX (p. 18)			
		CLICK System	74NPC4074A1WYX (p. 18)			
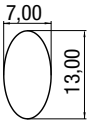	1,50	SCREW System		71NP90407000 (p. 20)		
	1,60			71NP90621000 (p. 23)		
	2,00					73NP93494000 (p. 47) 73NP90612000 (p. 42)
	1,60	CLICK System		71NP90474000 (p. 23)		
	2,00					73NP93507000 (p. 47) 73NP90669000 (p. 42)

All rights reserved · © copyright Visottica · 2018 · Rev.1 - For most updated information, visit our website **www.visotticacomotec.com**

VISOTTICACOMOTEC

Shape	Thickness	Type	PC MATERIAL	PVC MATERIAL	MPM MEDICAL PVC MATERIAL	MSM MEDICAL SILICONE MATERIAL
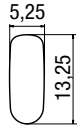	2,00	PLUG-IN System		71NP90467000 (p. 22)		
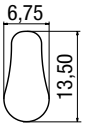	2,00	PLUG-IN System		71NP91510000 (p. 22)		
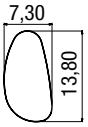	1,60	CLICK System		71NPB0920A1WY0 (p. 21)		
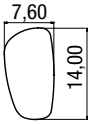	1,60	SCREW System			71NPB0929A1WN0 (p. 36) 71NPB0929A1WD0 (p. 36)	
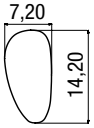	1,60	SCREW System			71NPB0930A1WN0 (p. 36) 71NPB0930A1WD0 (p. 36)	
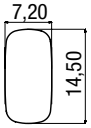	1,60	CLICK System		71NPB0921A1WY0 (p. 21) 71NPB0928A1WYX (p. 24)		
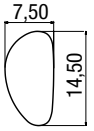	1,60	SCREW System			71NP91050000 (p. 36) 71NP91073000 (p. 36)	
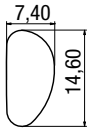	2,60	SCREW System				73NP91555000 (p. 43)
		CLICK System				73NP91548000 (p. 43)
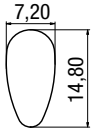	1,50	SCREW System				73NP93495000 (p. 46) 73NP93135000 (p. 41)
		CLICK System				73NP93497000 (p. 46) 73NP93136000 (p. 41)
	1,90			71NPB1010A1WYX (p. 26)		
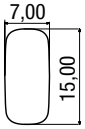	1,60	SCREW System		71NPB0684A1WYX (p. 24)		

All rights reserved · © copyright Visottica · 2018 · Rev.1 - For most updated information, visit our website **www.visotticacomotec.com**

SYNOPTIC INDEX

Shape	Thickness	Type	PC MATERIAL	PVC MATERIAL	MPM MEDICAL PVC MATERIAL	MSM MEDICAL SILICONE MATERIAL
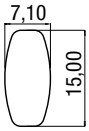	1,40	BUTTON System				73NPB0955A1WYX (p. 48)
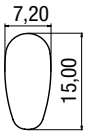	1,60	SCREW System		71NP90488000 (p. 21) 71NP91013000 (p. 24)		
		CLICK System		71NP90979000 (p. 21) 71NP91185000 (p. 24)		
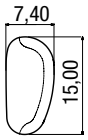	2,70	SCREW System			71NPB0940A1WN0 (p. 38) 71NPB0940A1WD0 (p. 38)	
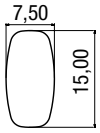	1,60	SCREW System			71NPB0931A1WNX (p. 37) 71NPB0931A1WDX (p. 37)	
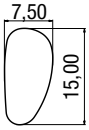	1,60	SCREW System		71NP90518000 (p. 25)	71NPB0943A1WN0 (p. 37) 71NPB0943A1WD0 (p. 37)	
		CLICK System		71NP90536000 (p. 25)		
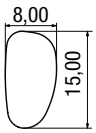	2,20	SCREW System				73NPC4545A1WY0 (p. 43)
		CLICK System				73NPC4544A1WY0 (p. 43)
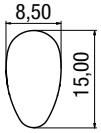	2,20	SCREW System				73NP93503000 (p. 47) 73NP91545000 (p. 43)
		CLICK System				73NP93506000 (p. 47) 73NP90552000 (p. 43)
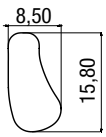	2,50	PLUG-IN System		71NP93691000 (p. 22)		
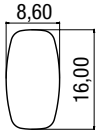	1,60	SCREW System			71NPB0932A1WNX (p. 37) 71NPB0932A1WDX (p. 37)	

All rights reserved · © copyright Visottica · 2018 · Rev.1 - For most updated information, visit our website **www.visotticacomotec.com**

Shape	Thickness	Type	PC MATERIAL	PVC MATERIAL	MPM MEDICAL PVC MATERIAL	MSM MEDICAL SILICONE MATERIAL
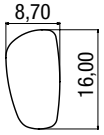	1,60	SCREW System			71NPB0938A1WN0 (p. 37) 71NPB0938A1WD0 (p. 37)	
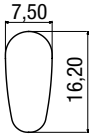	1,60	SCREW System			71NPB0933A1WNX (p. 38) 71NPB0933A1WDX (p. 38)	
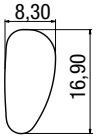	2,30	SCREW System				73NP93149000 (p. 43)
		CLICK System				73NP93150000 (p. 43)
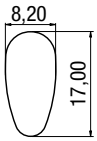	1,60	SCREW System		71NP90657000 (p. 25)	71NPB0934A1WNX (p. 38) 71NPB0934A1WDX (p. 38)	
		CLICK System		71NP90667000 (p. 25)		
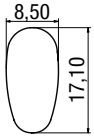	2,10	SCREW System				73NP91486000 (p. 44)
		CLICK System				73NP93185000 (p. 44)
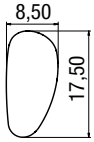	2,00	SCREW System		71NP91558000 (p. 27)	71NPB0941A1WN0 (p. 39) 71NPB0941A1WD0 (p. 39)	
		CLICK System		71NP90846000 (p. 27)		
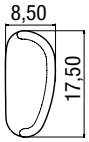	3,00	SCREW System		71NPB0937A1WY0 (p. 27)		
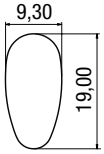	2,40	SCREW System				73NP91567000 (p. 44)
		CLICK System				73NP93017000 (p. 44)
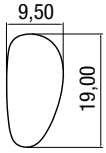	2,00	SCREW System		71NP93226000 (p. 27)		
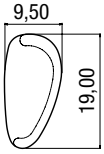	3,20	SCREW System			71NPB0942A1WN0 (p. 39) 71NPB0942A1WD0 (p. 39)	

All rights reserved · © copyright Visottica · 2018 · Rev.1 - For most updated information, visit our website **www.visotticacomotec.com**

no insert

Material color: **Crystal Clear**

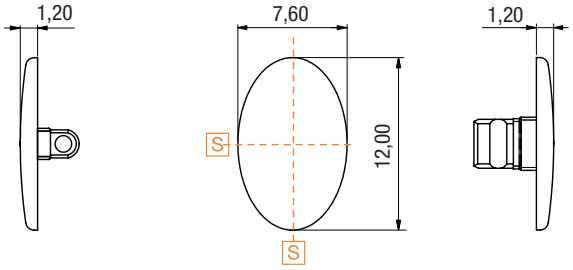

SCREW System	CODE	74NPC4073A1WYX
	Shape	146
CLICK System	CODE	74NPC4077A1WYX
	Shape	146

T.I.L. PAD

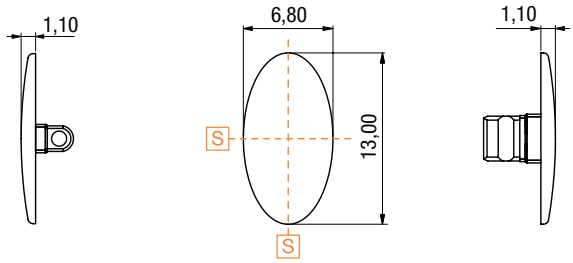

SCREW System	CODE	74NPC4076A1WYX
	Shape	147
CLICK System	CODE	74NPC4074A1WYX
	Shape	147

T.I.L. PAD

All rights reserved · © copyright Visottica · 2018 · Rev.1 - For most updated information, visit our website **www.visotticacomotec.com**

no insert

Material color: **Crystal Warm**

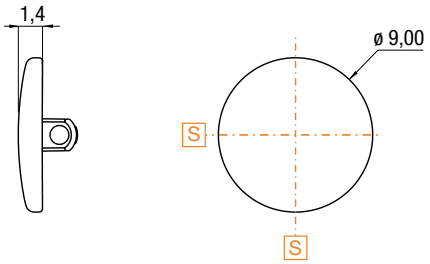

SCREW System	**CODE**	**71NP90596000**
	Shape	73

T.I.L. PAD Soft

Alternative Material:
- MPM Crystal Cold
- MOQ 20,000 pairs

No Personalization available

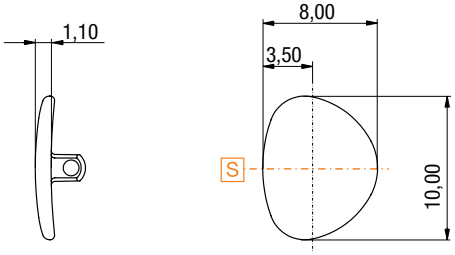

SCREW System	**CODE**	**71NP91047000**
	Shape	74

T.I.L. PAD Soft

Alternative Material:
- MPM Crystal Cold
- MOQ 20,000 pairs

No Personalization available

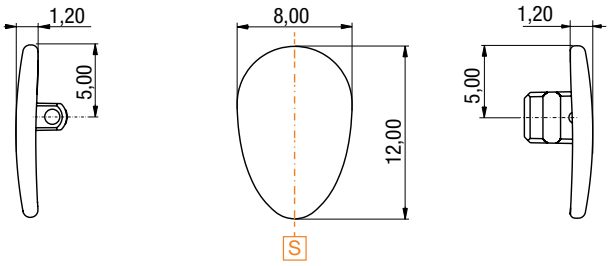

SCREW System	**CODE**	**71NP90523000**
	Shape	75
CLICK System	**CODE**	**71NP90419000**
	Shape	75

T.I.L. PAD Soft

Alternative Material:
- MPM Crystal Cold
- MOQ 20,000 pairs

No Personalization available

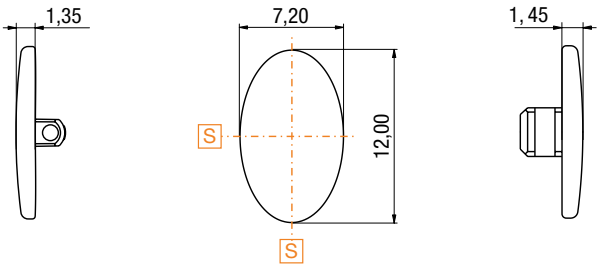

SCREW System	**CODE**	**71NP90595000**
	Shape	76
CLICK System	**CODE**	**71NP90643000**
	Shape	92

T.I.L. PAD Soft

Alternative Material:
- MPM Crystal Cold
- MOQ 20,000 pairs

No Personalization available

All rights reserved · © copyright Visottica · 2018 · Rev.1 - For most updated information, visit our website **www.visotticacomotec.com**

no insert

Material color: **Crystal Warm**

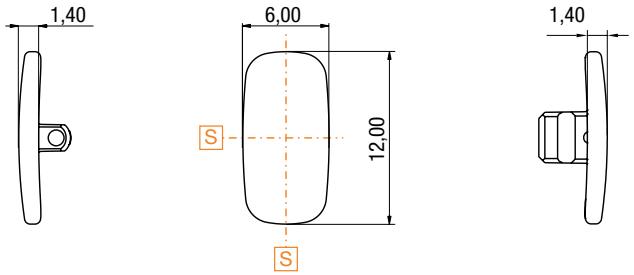

SCREW System	CODE	71NP90422000
	Shape	77
CLICK System	CODE	71NP90500000
	Shape	77

T.I.L. PAD Soft

Alternative Material:
- MPM Crystal Cold
- MOQ 20,000 pairs

No Personalization available

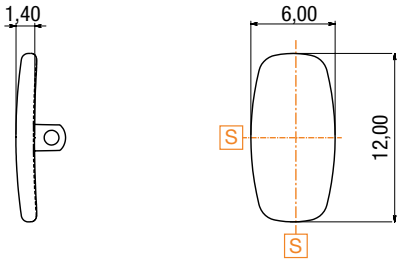

SCREW System	CODE	71NPB0744A1WYX
	Shape	79

T.I.L. PAD Soft

Alternative Material:
- MPM Crystal Cold
- MOQ 20,000 pairs

No Personalization available

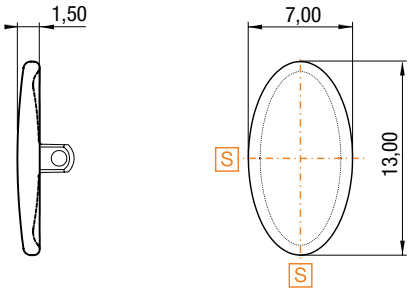

SCREW System	CODE	71NP90407000
	Shape	78

T.I.L. PAD Maxsoft

Alternative Material:
- MPM Crystal Cold
- MOQ 20,000 pairs

No Personalization available

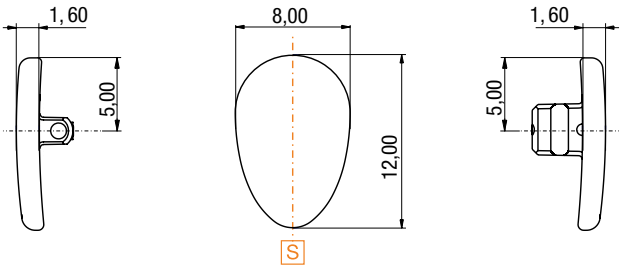

SCREW System	CODE	71NP90451000
	Shape	68
CLICK System	CODE	71NP90980000
	Shape	68

B PAD

Alternative Material:
- MPM Crystal Cold
- MOQ 20,000 pairs

No Personalization available

All rights reserved · © copyright Visottica · 2018 · Rev.1 - For most updated information, visit our website **www.visotticacomotec.com**

no insert

Material color: **Crystal Warm**

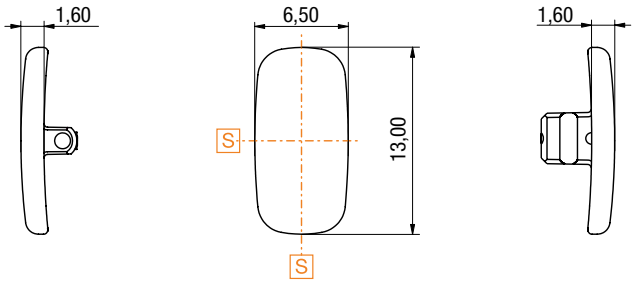

SCREW System	**CODE**	**71NP90507000**
	Shape	71
CLICK System	**CODE**	**71NP91709000**
	Shape	71

B PAD

Alternative Material:
- MPM Crystal Cold
- MOQ 20,000 pairs

No Personalization available

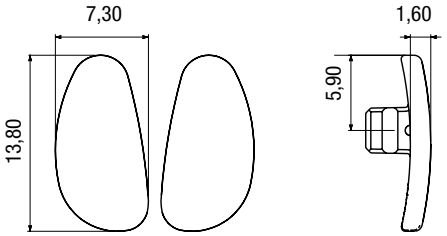

CLICK System	**CODE**	**71NPB0920A1WY0**
	Shape	70

B PAD

Alternative Material:
- MPM Crystal Cold
- MOQ 20,000 pairs

No Personalization available

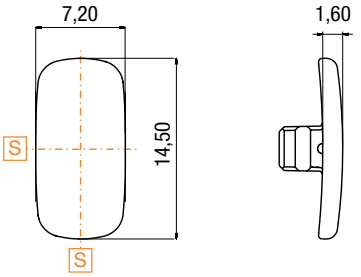

CLICK System	**CODE**	**71NPB0921A1WY0**
	Shape	72

B PAD

Alternative Material:
- MPM Crystal Cold
- MOQ 20,000 pairs

No Personalization available

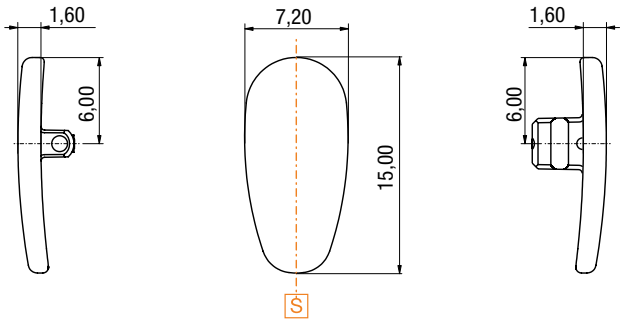

SCREW System	**CODE**	**71NP90488000**
	Shape	69
CLICK System	**CODE**	**71NP90979000**
	Shape	69

B PAD

Alternative Material:
- MPM Crystal Cold
- MOQ 20,000 pairs

No Personalization available

All rights reserved · © copyright Visottica · 2018 · Rev.1 - For most updated information, visit our website **www.visotticacomotec.com**

no insert

Material color: **Crystal Warm**

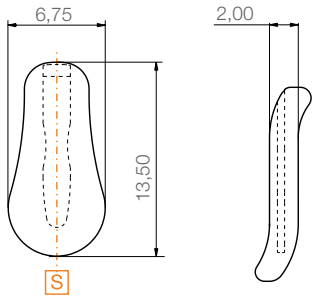

PLUG-IN System	CODE	71NP91510000
	Shape	80

Alternative Material:
• MPM Crystal Cold
• MOQ 20,000 pairs

No Personalization available

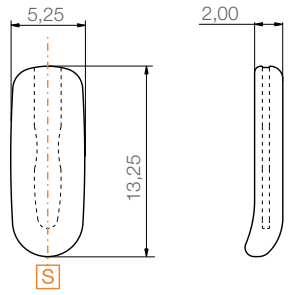

PLUG-IN System	CODE	71NP90467000
	Shape	81

Alternative Material:
• MPM Crystal Cold
• MOQ 20,000 pairs

No Personalization available

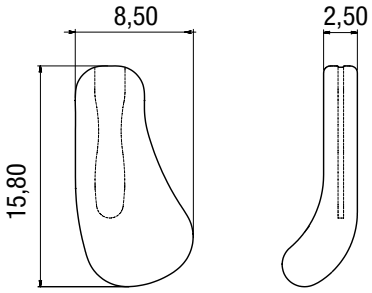

PLUG-IN System	CODE	71NP93691000
	Shape	90

Alternative Material:
• MPM Crystal Cold
• MOQ 20,000 pairs

No Personalization available

All rights reserved · © copyright Visottica · 2018 · Rev.1 - For most updated information, visit our website **www.visotticacomotec.com**

plastic insert "C"

Material color: **Crystal Warm**

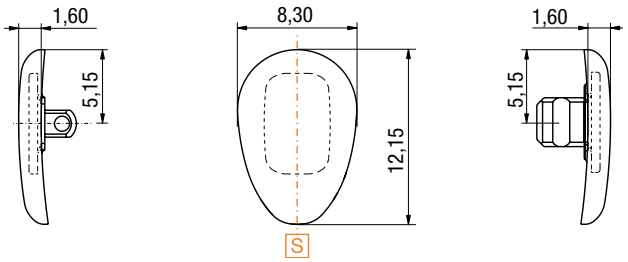

SCREW System	**CODE**	**71NP90525000**
	Shape	3
CLICK System	**CODE**	**71NP90443000**
	Shape	3

SLIM PAD

Alternative Material:
- MPM Crystal Cold
- MPM Crystal Warm
- MOQ 20,000 pairs

No Personalization available

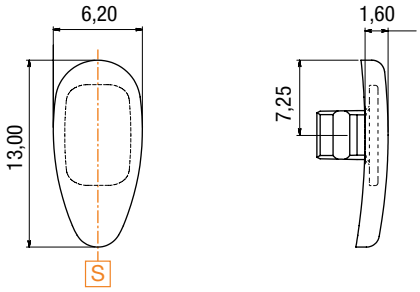

CLICK System	**CODE**	**71NPB0925A1WYX**
	Shape	27

SLIM PAD

Alternative Material:
- MPM Crystal Cold
- MPM Crystal Warm
- MOQ 20,000 pairs

No Personalization available

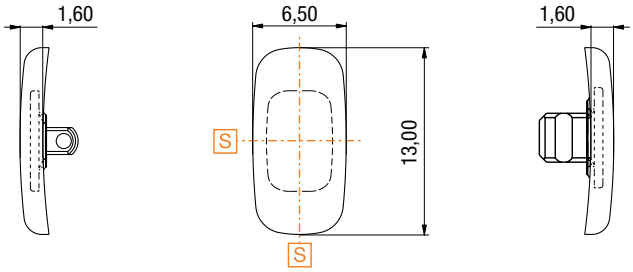

SCREW System	**CODE**	**71NP90412000**
	Shape	4
CLICK System	**CODE**	**71NP92163000**
	Shape	4

SLIM PAD

Alternative Material:
- MPM Crystal Cold
- MPM Crystal Warm
- MOQ 20,000 pairs

No Personalization available

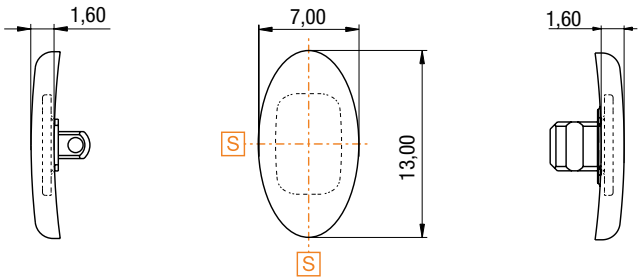

SCREW System	**CODE**	**71NP90621000**
	Shape	13
CLICK System	**CODE**	**71NP90474000**
	Shape	13

SLIM PAD

Alternative Material:
- MPM Crystal Cold
- MPM Crystal Warm
- MOQ 20,000 pairs

No Personalization available

All rights reserved · © copyright Visottica · 2018 · Rev.1 - For most updated information, visit our website **www.visotticacomotec.com**

plastic insert "C"

Material color: **Crystal Warm**

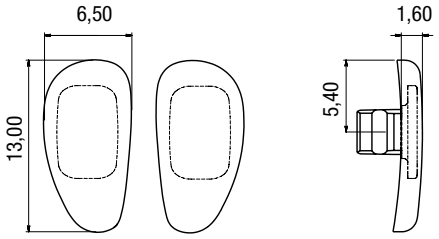

CLICK System	**CODE**	**71NPB0927A1WY0**
	Shape	26

SLIM PAD

Alternative Material:
- MPM Crystal Cold
- MPM Crystal Warm
- MOQ 20,000 pairs

No Personalization available

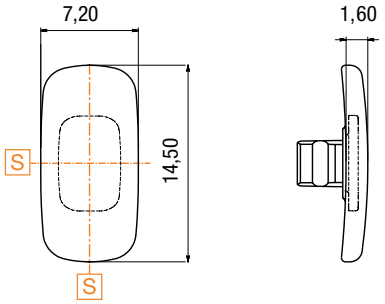

CLICK System	**CODE**	**71NPB0928A1WYX**
	Shape	32

SLIM PAD

Alternative Material:
- MPM Crystal Cold
- MPM Crystal Warm
- MOQ 20,000 pairs

No Personalization available

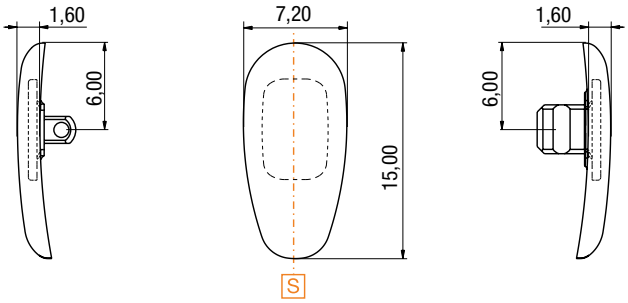

SCREW System	**CODE**	**71NP91013000**
	Shape	15
CLICK System	**CODE**	**71NP91185000**
	Shape	15

SLIM PAD

Alternative Material:
- MPM Crystal Cold
- MPM Crystal Warm
- MOQ 20,000 pairs

No Personalization available

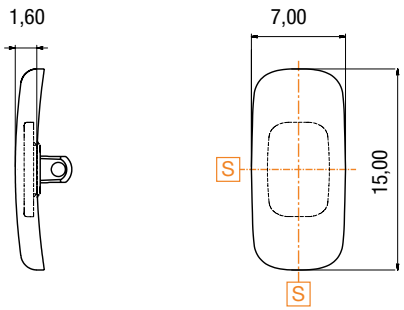

SCREW System	**CODE**	**71NPB0684A1WYX**
	Shape	25

SLIM PAD

Alternative Material:
- MPM Crystal Cold
- MPM Crystal Warm
- MOQ 20,000 pairs

No Personalization available

All rights reserved · © copyright Visottica · 2018 · Rev.1 - For most updated information, visit our website **www.visotticacomotec.com**

plastic insert "C"

Material color: **Crystal Warm**

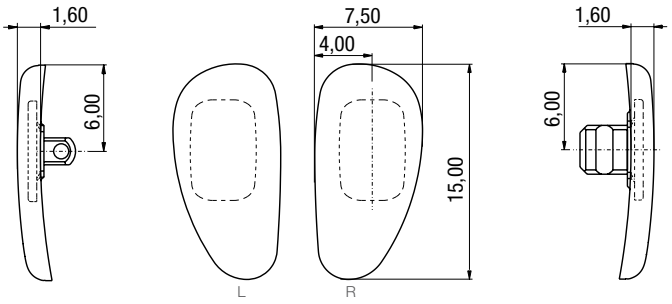

SCREW System	**CODE**	**71NP90518000**
	Shape	1
CLICK System	**CODE**	**71NP90536000**
	Shape	1

SLIM PAD

Alternative Material:
- MPM Crystal Cold
- MPM Crystal Warm
- MOQ 20,000 pairs

No Personalization available

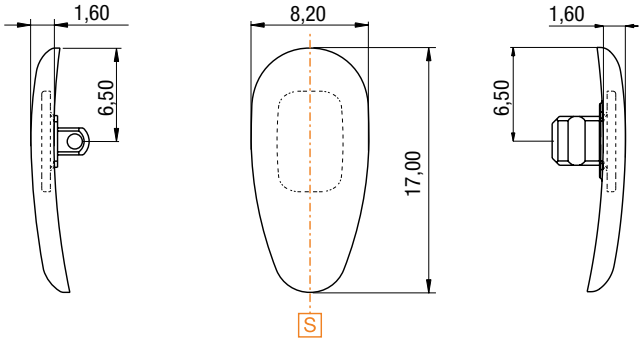

SCREW System	**CODE**	**71NP90657000**
	Shape	24
CLICK System	**CODE**	**71NP90667000**
	Shape	24

SLIM PAD

Alternative Material:
- MPM Crystal Cold
- MPM Crystal Warm
- MOQ 20,000 pairs

No Personalization available

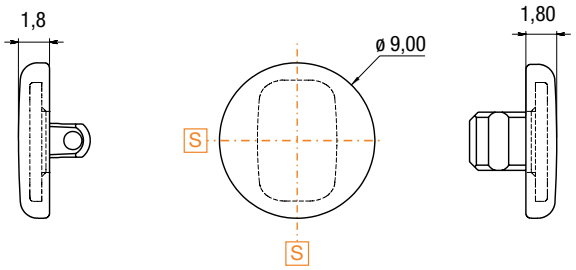

SCREW System	**CODE**	**71NPB0939A1WYX**
	Shape	30
CLICK System	**CODE**	**71NP91040000**
	Shape	30

SOFT PAD

Alternative Material:
- MPM Crystal Cold
- MPM Crystal Warm
- MOQ 20,000 pairs

No Personalization available

All rights reserved · © copyright Visottica · 2018 · Rev.1 - For most updated information, visit our website **www.visotticacomotec.com**

plastic insert "C"

Material color: **Crystal Warm**

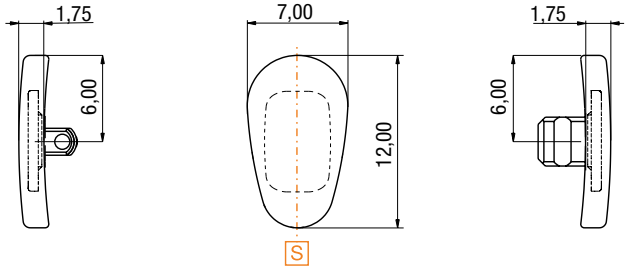

SCREW System	CODE	71NP90398000
	Shape	2
CLICK System	CODE	71NP91048000
	Shape	2

SOFT PAD

Alternative Material:
- MPM Crystal Cold
- MPM Crystal Warm
- MOQ 20,000 pairs

No Personalization available

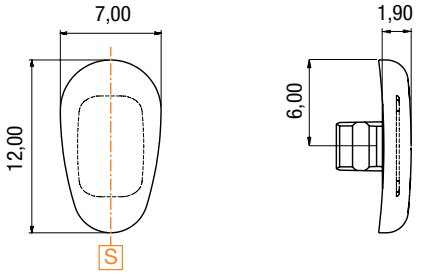

CLICK System	CODE	71NPB1011A1WYX
	Shape	5

SOFT PAD

Alternative Material:
- MPM Crystal Cold
- MPM Crystal Warm
- MOQ 20,000 pairs

No Personalization available

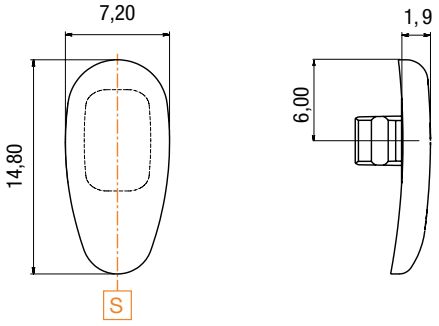

CLICK System	CODE	71NPB1010A1WYX
	Shape	6

SOFT PAD

Alternative Material:
- MPM Crystal Cold
- MPM Crystal Warm
- MOQ 20,000 pairs

No Personalization available

All rights reserved · © copyright Visottica · 2018 · Rev.1 - For most updated information, visit our website **www.visotticacomotec.com**

plastic insert "C"

Material color: **Crystal Warm**

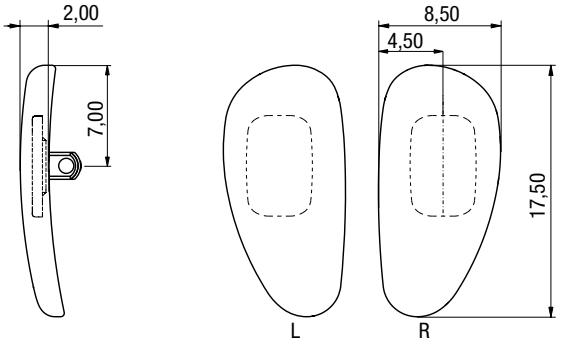

SCREW System	**CODE**	**71NP91558000**
	Shape	14
CLICK System	**CODE**	**71NP90846000**
	Shape	14

SOFT PAD

Alternative Material:
- MPM Crystal Cold
- MPM Crystal Warm
- MOQ 20,000 pairs

No Personalization available

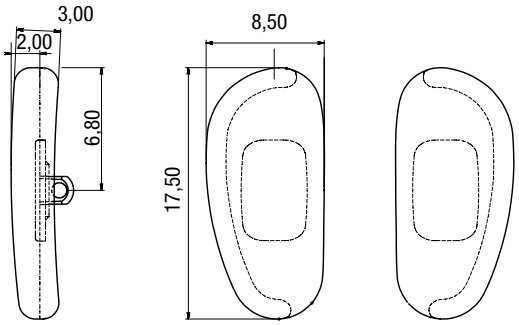

SCREW System	**CODE**	**71NPB0937A1WY0**
	Shape	31

SOFT PAD

Alternative Material:
- MPM Crystal Cold
- MPM Crystal Warm
- MOQ 20,000 pairs

No Personalization available

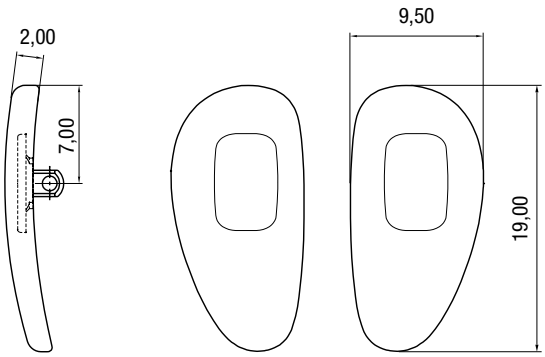

SCREW System	**CODE**	**71NP93226000**
	Shape	29

SOFT PAD

Alternative Material:
- MPM Crystal Cold
- MPM Crystal Warm
- MOQ 20,000 pairs

No Personalization available

All rights reserved · © copyright Visottica · 2018 · Rev.1 - For most updated information, visit our website **www.visotticacomotec.com**

plastic insert "C"

Material color: **Crystal Warm**

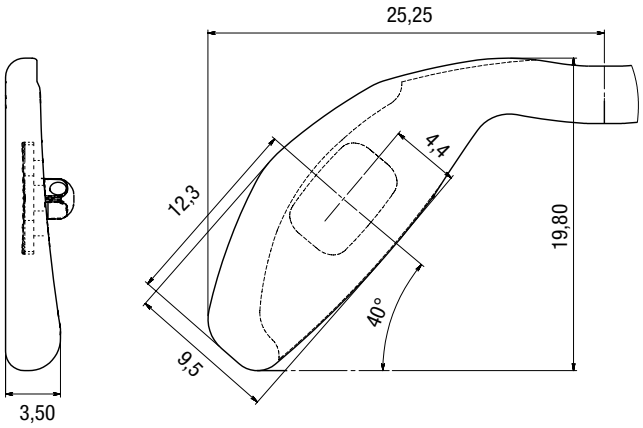

TWIN PAD

SCREW System	CODE	71NPB0935A1WYX
	Shape	57

Alternative Material:
- MPM Crystal Cold
- MPM Crystal Warm
- MOQ 20,000 pairs

No Personalization available

All rights reserved · © copyright Visottica · 2018 · Rev.1 - For most updated information, visit our website **www.visotticacomotec.com**

plastic insert "C"

Material color: **Crystal Cold**

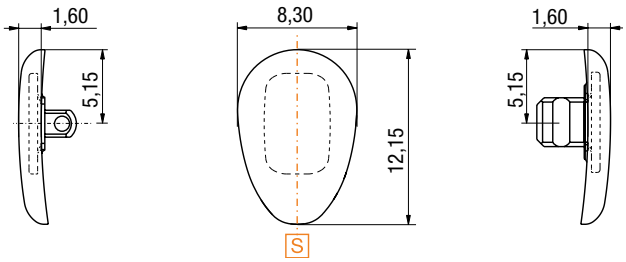

SCREW System		
	Shape	3
CLICK System		
	Shape	3

SLIM PAD

Alternative Material:
- MPM Crystal Warm
- MOQ 20,000 pairs

Personalizations on insert:
- Personalization range pages 8-9
- **Alternative insert:**
- V Shape
- MOQ 200,000 pairs

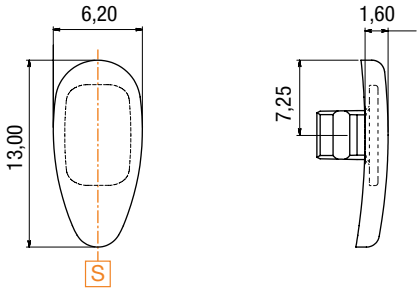

CLICK System		
	Shape	27

SLIM PAD

Alternative Material:
- MPM Crystal Warm
- MOQ 20,000 pairs

Personalizations on insert:
- Personalization range pages 8-9
- **Alternative insert:**
- V Shape
- MOQ 200,000 pairs

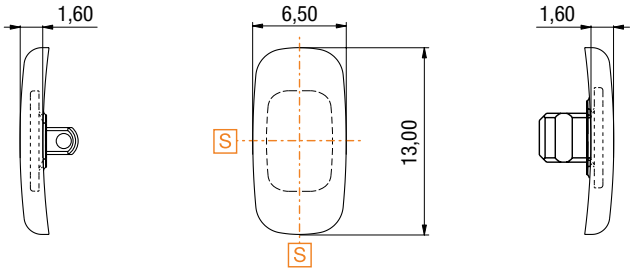

SCREW System		
	Shape	4
CLICK System		
	Shape	4

SLIM PAD

Alternative Material:
- MPM Crystal Warm
- MOQ 20,000 pairs

Personalizations on insert:
- Personalization range pages 8-9
- **Alternative insert:**
- V Shape
- MOQ 200,000 pairs

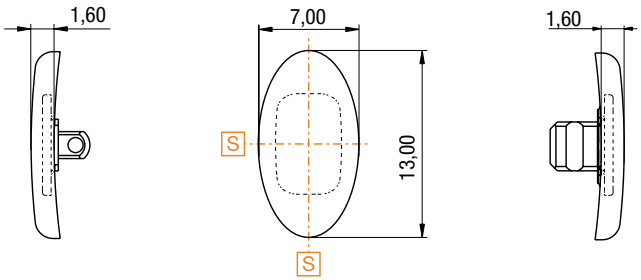

SCREW System		
	Shape	13
CLICK System		
	Shape	13

SLIM PAD

Alternative Material:
- MPM Crystal Warm
- MOQ 20,000 pairs

Personalizations on insert:
- Personalization range pages 8-9
- **Alternative insert:**
- V Shape
- MOQ 200,000 pairs

All rights reserved · © copyright Visottica · 2018 · Rev.1 - For most updated information, visit our website **www.visotticacomotec.com**

plastic insert "C"

Material color: **Crystal Cold**

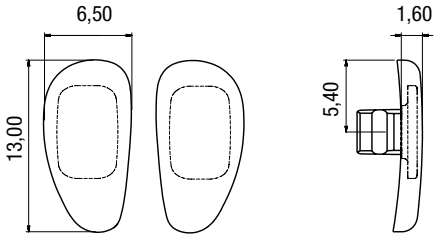

CLICK System		
	Shape	26

SLIM PAD

Alternative Material:
- MPM Crystal Warm
- MOQ 20,000 pairs

Personalizations on insert:
- Personalization range pages 8-9
- **Alternative insert:**
- V Shape
- MOQ 200,000 pairs

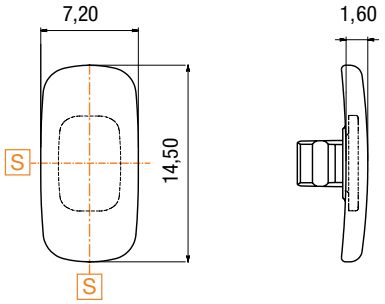

CLICK System		
	Shape	32

SLIM PAD

Alternative Material:
- MPM Crystal Warm
- MOQ 20,000 pairs

Personalizations on insert:
- Personalization range pages 8-9
- **Alternative insert:**
- V Shape
- MOQ 200,000 pairs

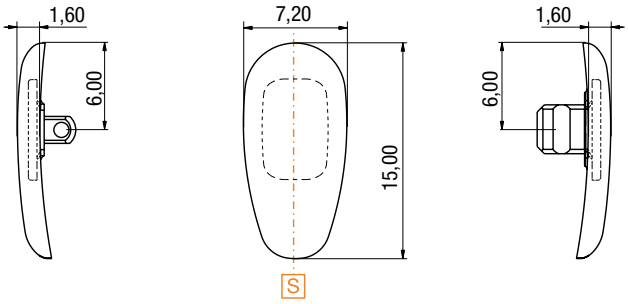

SCREW System		
	Shape	15

CLICK System		
	Shape	15

SLIM PAD

Alternative Material:
- MPM Crystal Warm
- MOQ 20,000 pairs

Personalizations on insert:
- Personalization range pages 8-9
- **Alternative insert:**
- V Shape
- MOQ 200,000 pairs

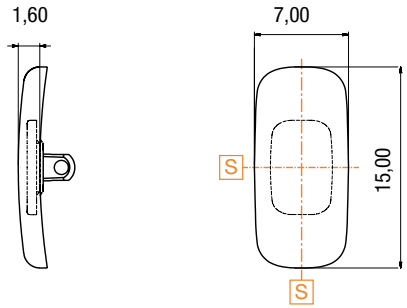

SCREW System		
	Shape	25

SLIM PAD

Alternative Material:
- MPM Crystal Warm
- MOQ 20,000 pairs

Personalizations on insert:
- Personalization range pages 8-9
- **Alternative insert:**
- V Shape
- MOQ 200,000 pairs

All rights reserved · © copyright Visottica · 2018 · Rev.1 - For most updated information, visit our website **www.visotticacomotec.com**

plastic insert "C"

Material color: **Crystal Cold**

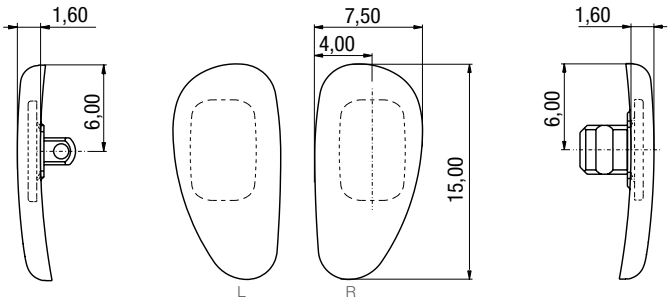

SCREW System	Shape	1
CLICK System	Shape	1

SLIM PAD

Alternative Material:
- MPM Crystal Warm
- MOQ 20,000 pairs

Personalizations on insert:
- Personalization range pages 8-9
- **Alternative insert:**
- V Shape
- MOQ 200,000 pairs

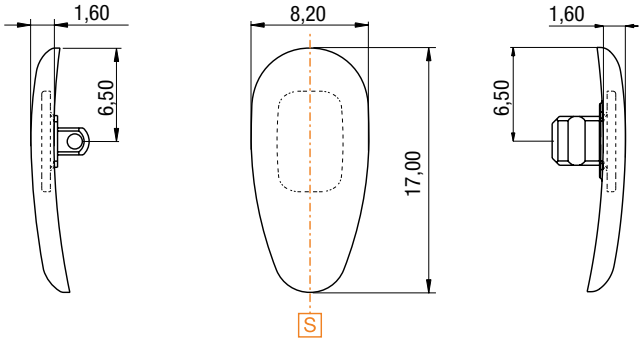

SCREW System	Shape	24
CLICK System	Shape	24

SLIM PAD

Alternative Material:
- MPM Crystal Warm
- MOQ 20,000 pairs

Personalizations on insert:
- Personalization range pages 8-9
- **Alternative insert:**
- V Shape
- MOQ 200,000 pairs

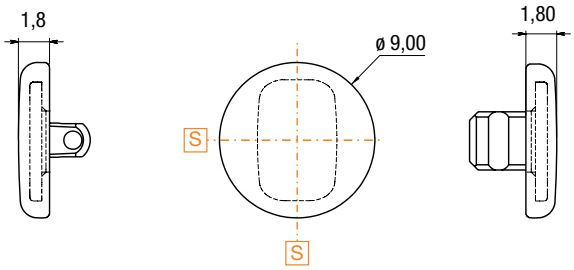

SCREW System	Shape	30
CLICK System	Shape	30

SOFT PAD

Alternative Material:
- MPM Crystal Warm
- MOQ 20,000 pairs

Personalizations on insert:
- Personalization range pages 8-9
- **Alternative insert:**
- V Shape
- MOQ 200,000 pairs

All rights reserved · © copyright Visottica · 2018 · Rev.1 - For most updated information, visit our website **www.visotticacomotec.com**

plastic insert "C"

Material color: **Crystal Cold**

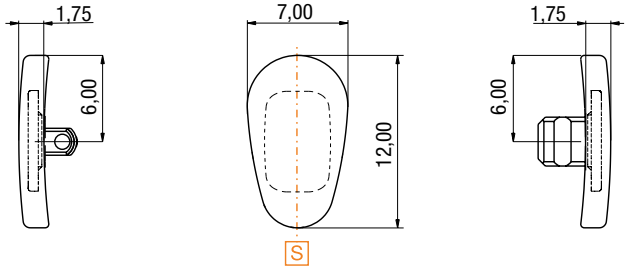

SCREW System		
	Shape	2
CLICK System		
	Shape	2

SOFT PAD

Alternative Material:
- MPM Crystal Warm
- MOQ 20,000 pairs

Personalizations on insert:
- Personalization range pages 8-9
- **Alternative insert:**
- V Shape
- MOQ 200,000 pairs

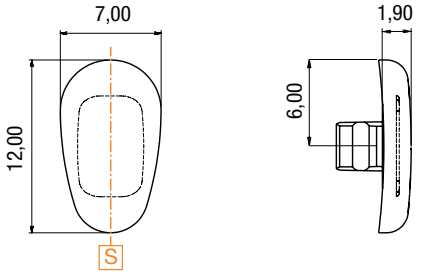

CLICK System		
	Shape	5

SOFT PAD

Alternative Material:
- MPM Crystal Warm
- MOQ 20,000 pairs

Personalizations on insert:
- Personalization range pages 8-9
- **Alternative insert:**
- V Shape
- MOQ 200,000 pairs

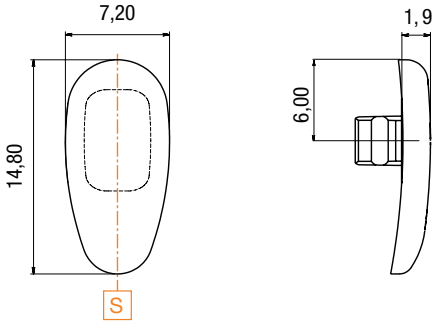

CLICK System		
	Shape	6

SOFT PAD

Alternative Material:
- MPM Crystal Warm
- MOQ 20,000 pairs

Personalizations on insert:
- Personalization range pages 8-9
- **Alternative insert:**
- V Shape
- MOQ 200,000 pairs

All rights reserved · © copyright Visottica · 2018 · Rev.1 - For most updated information, visit our website **www.visotticacomotec.com**

plastic insert "C"

Material color: **Crystal Cold**

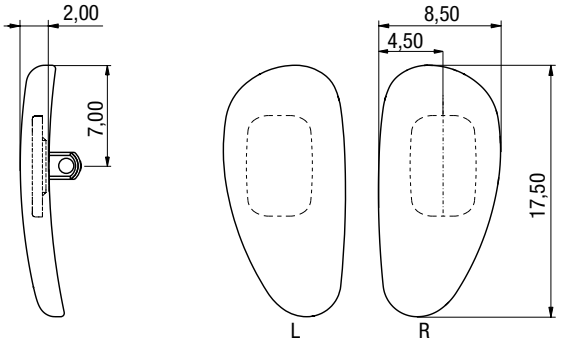

SCREW System	Shape	14
CLICK System	Shape	14

SOFT PAD

Alternative Material:
- MPM Crystal Warm
- MOQ 20,000 pairs

Personalizations on insert:
- Personalization range pages 8-9
- **Alternative insert:**
- V Shape
- MOQ 200,000 pairs

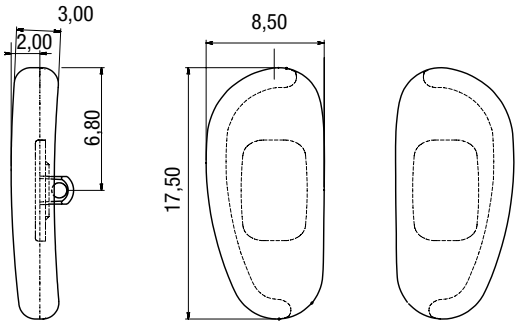

SCREW System	Shape	31

SOFT PAD

Alternative Material:
- MPM Crystal Warm
- MOQ 20,000 pairs

Personalizations on insert:
- Personalization range pages 8-9
- **Alternative insert:**
- V Shape
- MOQ 200,000 pairs

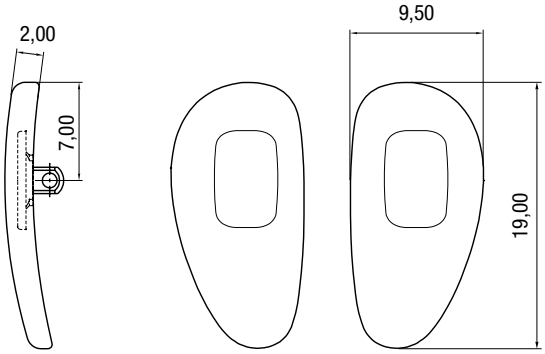

SCREW System	Shape	29

SOFT PAD

Alternative Material:
- MPM Crystal Warm
- MOQ 20,000 pairs

Personalizations on insert:
- Personalization range pages 8-9
- **Alternative insert:**
- V Shape
- MOQ 200,000 pairs

All rights reserved · © copyright Visottica · 2018 · Rev.1 - For most updated information, visit our website **www.visotticacomotec.com**

plastic insert "C"

Material color: **Crystal Cold**

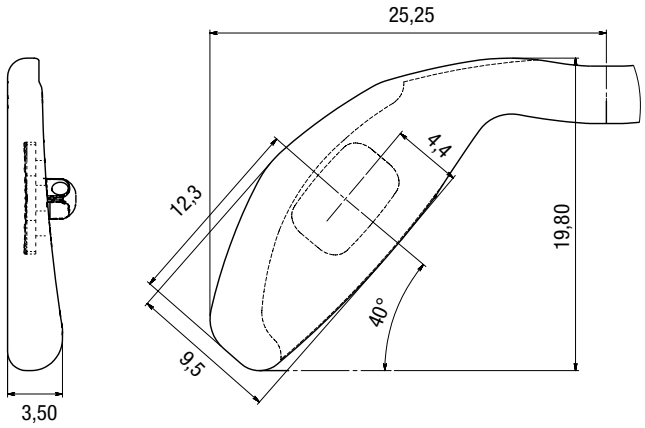

TWIN PAD

SCREW System		
	Shape	57

Alternative Material:
- MPM Crystal Warm
- MOQ 20,000 pairs

Personalizations on insert:
- Personalization range pages 8-9

• Alternative insert:
- V Shape
- MOQ 200,000 pairs

All rights reserved · © copyright Visottica · 2018 · Rev.1 - For most updated information, visit our website **www.visotticacomotec.com**

zamak insert

Material color: **Crystal Cold**

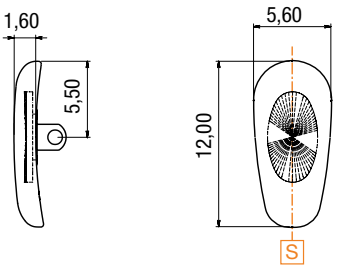

SLIM PAD

SCREW System	CODE	71NPB0923A1WNX
	Shape	21
	NICKEL PLATED INSERT	
SCREW System	CODE	71NPB0923A1WDX
	Shape	21
	GOLD PLATED INSERT	

Alternative Material:
- MPM Crystal Warm
- MOQ 20,000 pairs

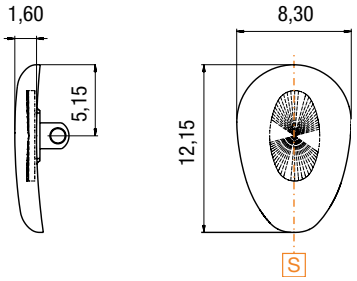

SLIM PAD

SCREW System	CODE	71NP91034000
	Shape	3
	NICKEL PLATED INSERT	
SCREW System	CODE	71NP91507000
	Shape	3
	GOLD PLATED INSERT	

Alternative Material:
- MPM Crystal Warm
- MOQ 20,000 pairs

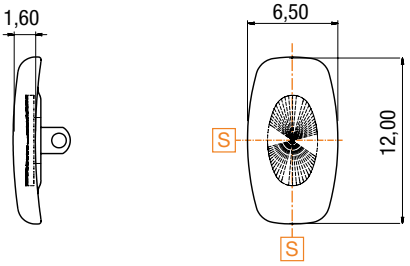

SLIM PAD

SCREW System	CODE	71NPB0924A1WNX
	Shape	46
	NICKEL PLATED INSERT	
SCREW System	CODE	71NPB0924A1WDX
	Shape	46
	GOLD PLATED INSERT	

Alternative Material:
- MPM Crystal Warm
- MOQ 20,000 pairs

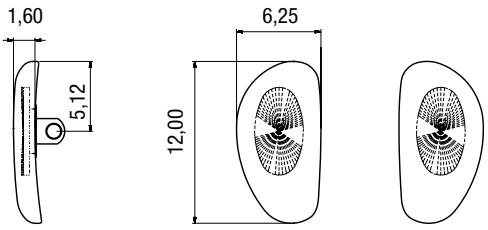

SLIM PAD

SCREW System	CODE	71NP91867000
	Shape	44
	NICKEL PLATED INSERT	
SCREW System	CODE	71NP91867A1WD0
	Shape	44
	GOLD PLATED INSERT	

Alternative Material:
- MPM Crystal Warm
- MOQ 20,000 pairs

All rights reserved · © copyright Visottica · 2018 · Rev.1 - For most updated information, visit our website **www.visotticacomotec.com**

zamak insert

Material color: **Crystal Cold**

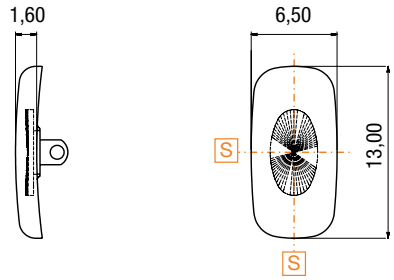

SLIM PAD

SCREW System		
	CODE	**71NPB0926A1WNX**
	Shape	4
	NICKEL PLATED INSERT	

SCREW System		
	CODE	**71NPB0926A1WDX**
	Shape	4
	GOLD PLATED INSERT	

Alternative Material:
- MPM Crystal Warm
- MOQ 20,000 pairs

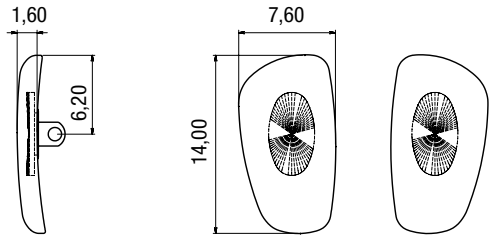

SLIM PAD

SCREW System		
	CODE	**71NPB0929A1WN0**
	Shape	10
	NICKEL PLATED INSERT	

SCREW System		
	CODE	**71NPB0929A1WD0**
	Shape	**10**
	GOLD PLATED INSERT	

Alternative Material:
- MPM Crystal Warm
- MOQ 20,000 pairs

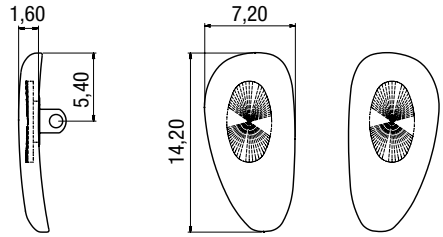

SLIM PAD

SCREW System		
	CODE	**71NPB0930A1WN0**
	Shape	49
	NICKEL PLATED INSERT	

SCREW System		
	CODE	**71NPB0930A1WD0**
	Shape	49
	GOLD PLATED INSERT	

Alternative Material:
- MPM Crystal Warm
- MOQ 20,000 pairs

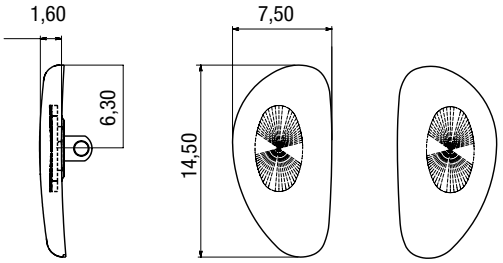

SLIM PAD

SCREW System		
	CODE	**71NP91050000**
	Shape	8
	NICKEL PLATED INSERT	

SCREW System		
	CODE	**71NP91073000**
	Shape	8
	GOLD PLATED INSERT	

Alternative Material:
- MPM Crystal Warm
- MOQ 20,000 pairs

All rights reserved · © copyright Visottica · 2018 · Rev.1 - For most updated information, visit our website **www.visotticacomotec.com**

zamak insert

Material color: **Crystal Cold**

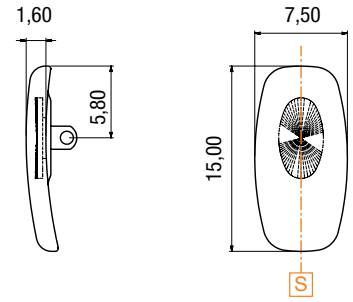

SLIM PAD

SCREW System	CODE	71NPB0931A1WNX
	Shape	47
	NICKEL PLATED INSERT	
SCREW System	CODE	71NPB0931A1WDX
	Shape	47
	GOLD PLATED INSERT	

Alternative Material:
- MPM Crystal Warm
- MOQ 20,000 pairs

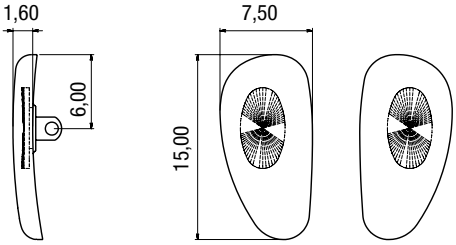

SLIM PAD

SCREW System	CODE	71NPB0943A1WN0
	Shape	1
	NICKEL PLATED INSERT	
SCREW System	CODE	71NPB0943A1WD0
	Shape	1
	GOLD PLATED INSERT	

Alternative Material:
- MPM Crystal Warm
- MOQ 20,000 pairs

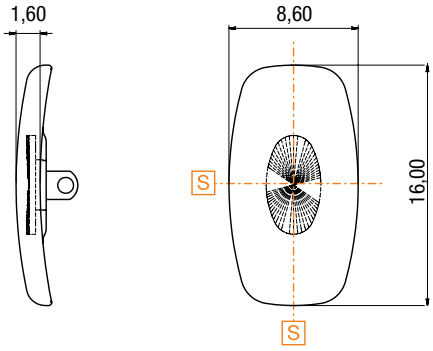

SLIM PAD

SCREW System	CODE	71NPB0932A1WNX
	Shape	48
	NICKEL PLATED INSERT	
SCREW System	CODE	71NPB0932A1WDX
	Shape	48
	GOLD PLATED INSERT	

Alternative Material:
- MPM Crystal Warm
- MOQ 20,000 pairs

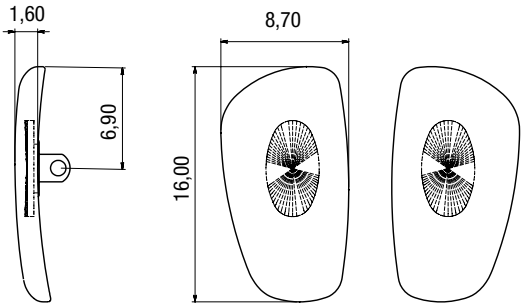

SLIM PAD

SCREW System	CODE	71NPB0938A1WN0
	Shape	51
	NICKEL PLATED INSERT	
SCREW System	CODE	71NPB0938A1WD0
	Shape	51
	GOLD PLATED INSERT	

Alternative Material:
- MPM Crystal Warm
- MOQ 20,000 pairs

All rights reserved · © copyright Visottica · 2018 · Rev.1 - For most updated information, visit our website **www.visotticacomotec.com**

zamak insert

Material color: **Crystal Cold**

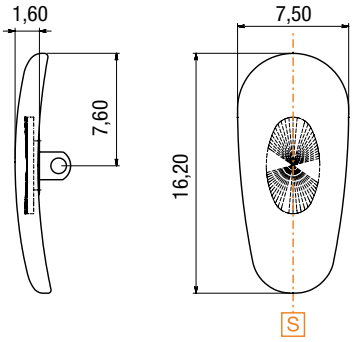

SLIM PAD

SCREW System	**CODE**	**71NPB0933A1WNX**
	Shape	16
	NICKEL PLATED INSERT	
SCREW System	**CODE**	**71NPB0933A1WDX**
	Shape	16
	GOLD PLATED INSERT	

Alternative Material:
- MPM Crystal Warm
- MOQ 20,000 pairs

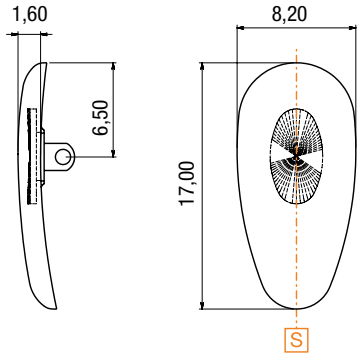

SLIM PAD

SCREW System	**CODE**	**71NPB0934A1WNX**
	Shape	24
	NICKEL PLATED INSERT	
SCREW System	**CODE**	**71NPB0934A1WDX**
	Shape	24
	GOLD PLATED INSERT	

Alternative Material:
- MPM Crystal Warm
- MOQ 20,000 pairs

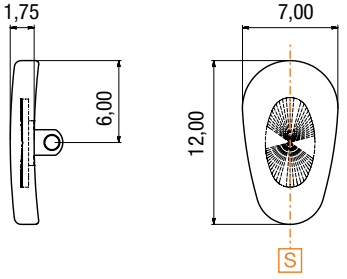

SOFT PAD

SCREW System	**CODE**	**71NPB0922A1WNX**
	Shape	2
	NICKEL PLATED INSERT	
SCREW System	**CODE**	**71NPB0922A1WDX**
	Shape	**2**
	GOLD PLATED INSERT	

Alternative Material:
- MPM Crystal Warm
- MOQ 20,000 pairs

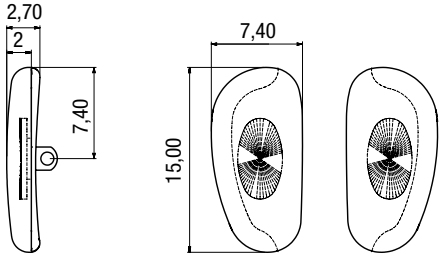

SOFT PAD

SCREW System	**CODE**	**71NPB0940A1WN0**
	Shape	45
	NICKEL PLATED INSERT	
SCREW System	**CODE**	**71NPB0940A1WD0**
	Shape	45
	GOLD PLATED INSERT	

Alternative Material:
- MPM Crystal Warm
- MOQ 20,000 pairs

All rights reserved · © copyright Visottica · 2018 · Rev.1 - For most updated information, visit our website **www.visotticacomotec.com**

zamak insert

Material color: **Crystal Cold**

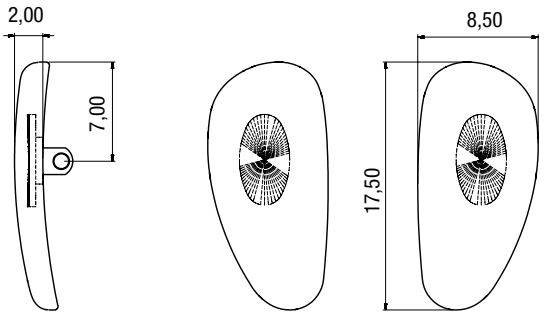

SOFT PAD

SCREW System	CODE	71NPB0941A1WN0
	Shape	14
	NICKEL PLATED INSERT	
SCREW System	CODE	71NPB0941A1WD0
	Shape	14
	GOLD PLATED INSERT	

Alternative Material:
- MPM Crystal Warm
- MOQ 20,000 pairs

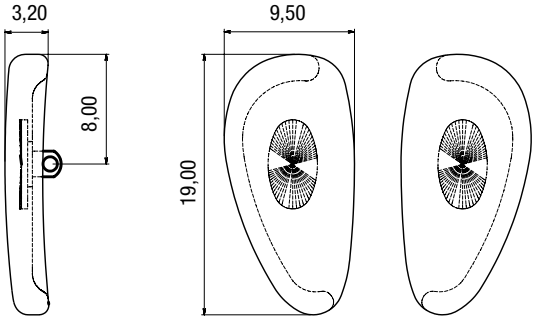

SOFT PAD

SCREW System	CODE	71NPB0942A1WN0
	Shape	52
	NICKEL PLATED INSERT	
SCREW System	CODE	71NPB0942A1WD0
	Shape	52
	GOLD PLATED INSERT	

Alternative Material:
- MPM Crystal Warm
- MOQ 20,000 pairs

All rights reserved · © copyright Visottica · 2018 · Rev.1 - For most updated information, visit our website **www.visotticacomotec.com**

zamak insert

Material color: **Crystal Cold**

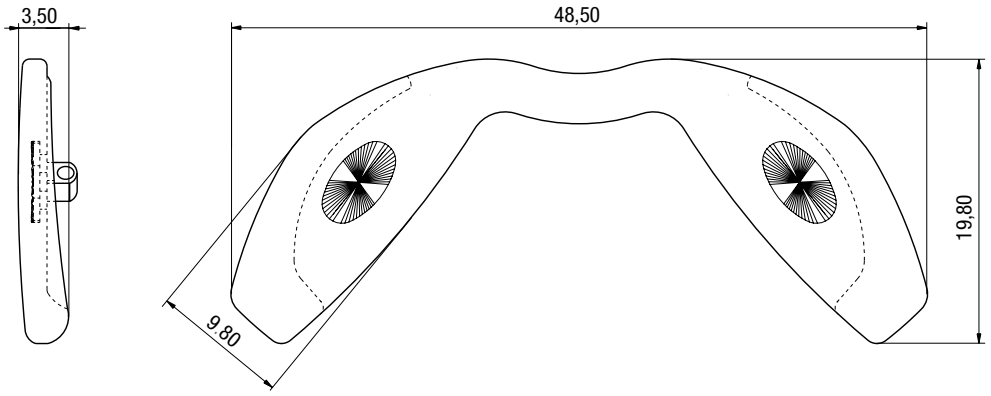

SCREW System	CODE	71NP93030000
	Shape	58
	NICKEL PLATED INSERT	

Alternative Material:
- MPM Crystal Warm
- MOQ 20,000 pairs

TWIN PAD

SCREW System	CODE	71NP90715000
	Shape	58
	GOLD PLATED INSERT	

Alternative Material:
- MPM Crystal Warm
- MOQ 20,000 pairs

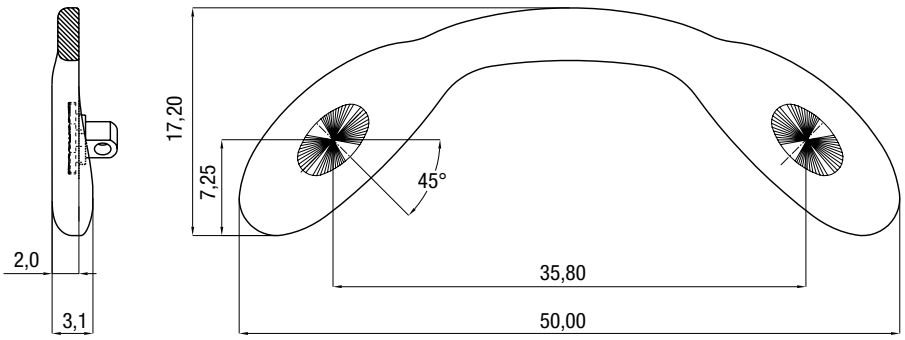

SCREW System	CODE	71NPB0936A1WNX
	Shape	59
	NICKEL PLATED INSERT	

Alternative Material:
- MPM Crystal Warm
- MOQ 20,000 pairs

TWIN PAD

SCREW System	CODE	71NPB0936A1WDX
	Shape	59
	GOLD PLATED INSERT	

Alternative Material:
- MPM Crystal Warm
- MOQ 20,000 pairs

All rights reserved · © copyright Visottica · 2018 · Rev.1 - For most updated information, visit our website **www.visotticacomotec.com**

plastic insert

Material color: **Crystal Clear**

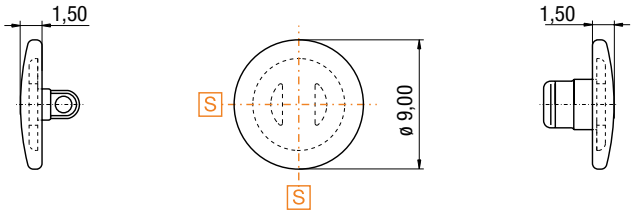

SCREW System	CODE	73NP93137000
	Shape	137
CLICK System	CODE	73NP93140000
	Shape	137

SLIMICONE PAD

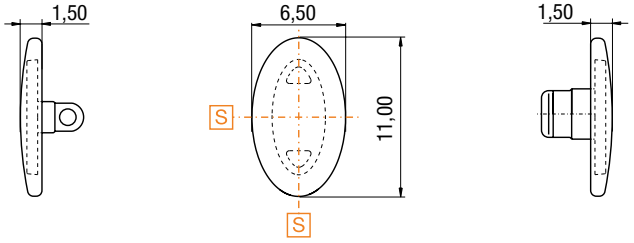

SCREW System	CODE	73NP93011000
	Shape	138
CLICK System	CODE	73NP93010000
	Shape	138

SLIMICONE PAD

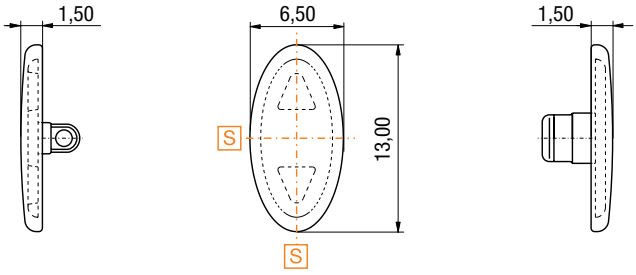

SCREW System	CODE	73NP93013000
	Shape	134
CLICK System	CODE	73NP93012000
	Shape	134

SLIMICONE PAD

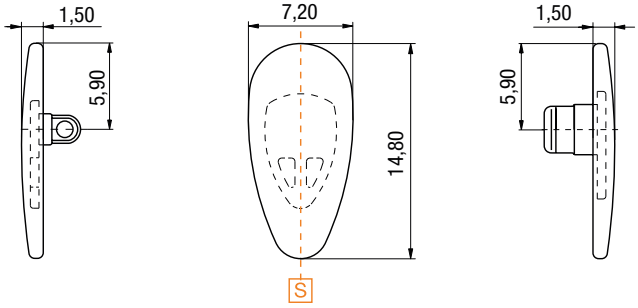

SCREW System	CODE	73NP93135000
	Shape	135
CLICK System	CODE	73NP93136000
	Shape	135

SLIMICONE PAD

All rights reserved · © copyright Visottica · 2018 · Rev.1 - For most updated information, visit our website **www.visotticacomotec.com**

plastic insert

Material color: **Crystal Clear**

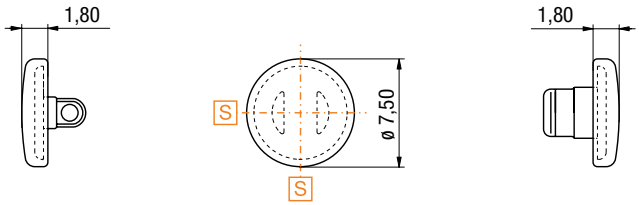

SCREW System	CODE	73NP93131000
	Shape	133
CLICK System	CODE	73NP93134000
	Shape	133

SILICONE PAD

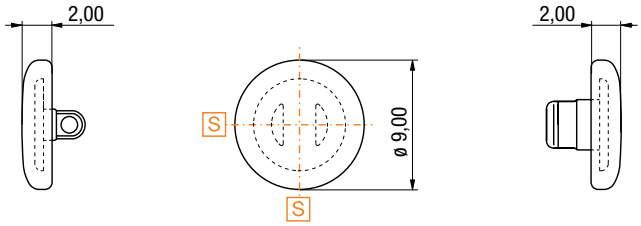

SCREW System	CODE	73NP90644000
	Shape	123
CLICK System	CODE	73NP91269000
	Shape	123

SILICONE PAD

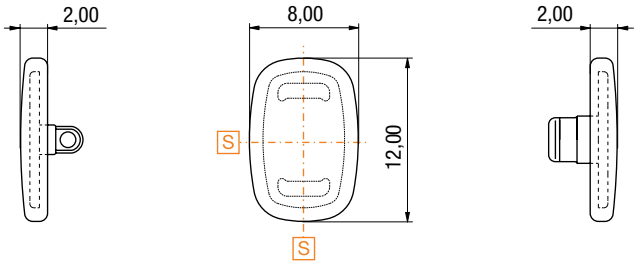

SCREW System	CODE	73NP93007000
	Shape	132
CLICK System	CODE	73NP93006000
	Shape	132

SILICONE PAD

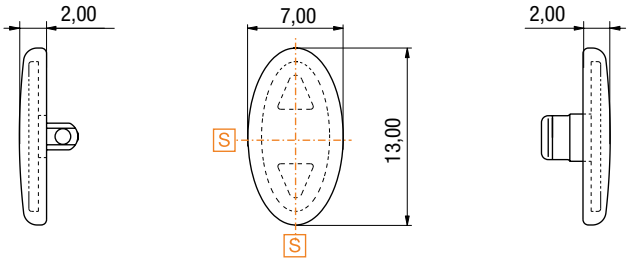

SCREW System	CODE	73NP90612000
	Shape	110
CLICK System	CODE	73NP90669000
	Shape	110

SILICONE PAD

All rights reserved · © copyright Visottica · 2018 · Rev.1 - For most updated information, visit our website **www.visotticacomotec.com**

plastic insert

Material color: **Crystal Clear**

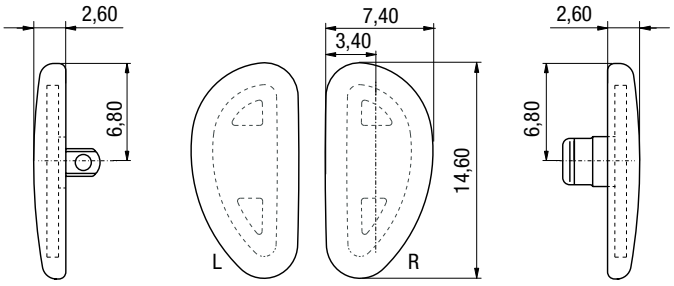

SCREW System	CODE	73NP91555000
	Shape	127
CLICK System	CODE	73NP91548000
	Shape	127

SILICONE PAD

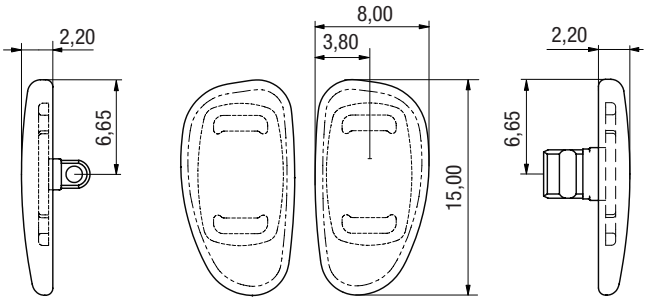

SCREW System	CODE	73NPC4545A1WY0
	Shape	149
CLICK System	CODE	73NPC4544A1WY0
	Shape	149

SILICONE PAD

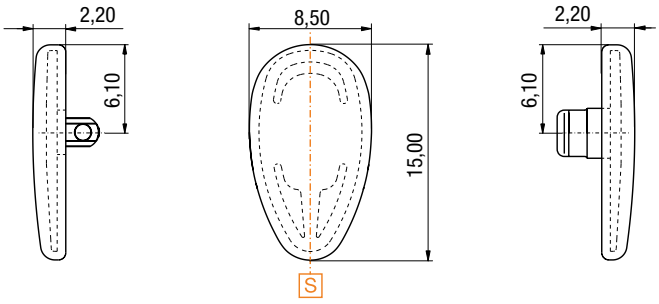

SCREW System	CODE	73NP91545000
	Shape	113
CLICK System	CODE	73NP90552000
	Shape	113

SILICONE PAD

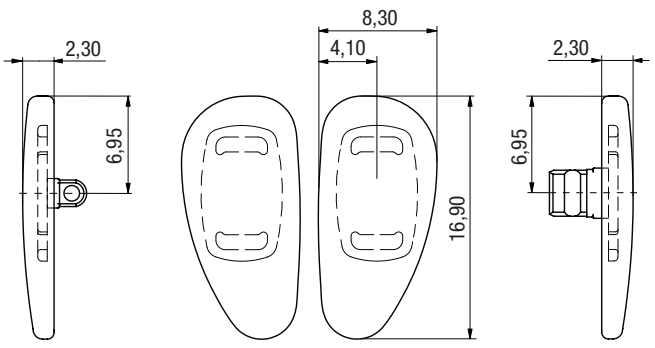

SCREW System	CODE	73NP93149000
	Shape	154
CLICK System	CODE	73NP93150000
	Shape	154

SILICONE PAD

All rights reserved · © copyright Visottica · 2018 · Rev.1 - For most updated information, visit our website **www.visotticacomotec.com**

MSM MEDICAL SILICONE MATERIAL

NEUTRAL VERSION

VISOTTICACOMOTEC

plastic insert

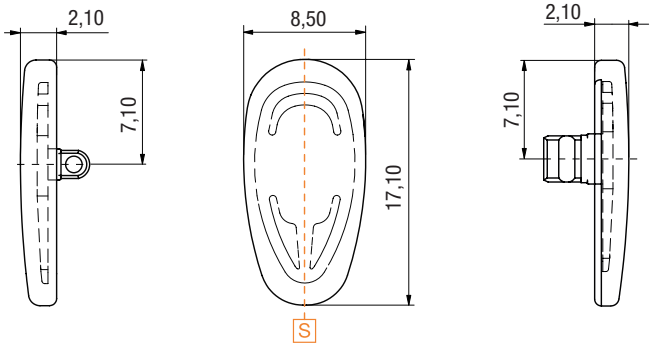

SCREW System	CODE	73NP91486000
	Shape	111
CLICK System	CODE	73NP93185000
	Shape	111

SILICONE PAD

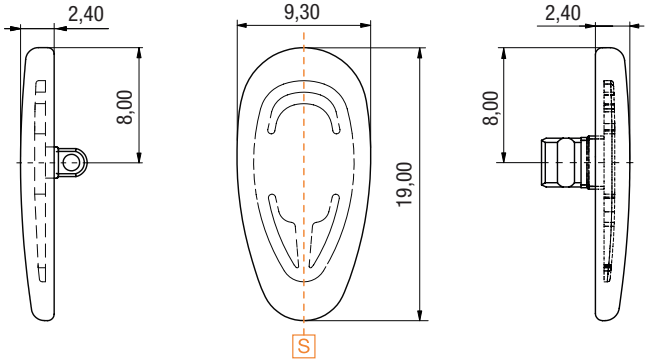

SCREW System	CODE	73NP91567000
	Shape	105
CLICK System	CODE	73NP93017000
	Shape	105

SILICONE PAD

All rights reserved · © copyright Visottica · 2018 · Rev.1 - For most updated information, visit our website **www.visotticacomotec.com**

plastic insert

Material color: **Crystal Clear**

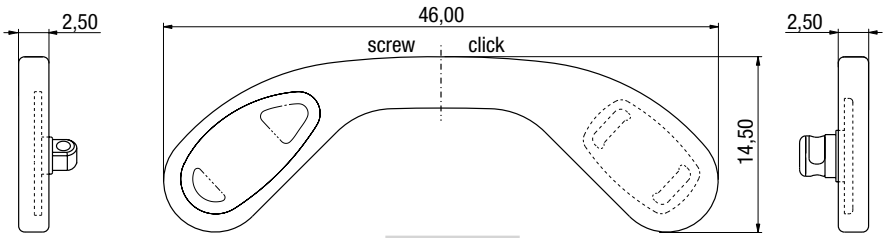

SCREW System	CODE	73NP93120000
	Shape	167

TWIN PAD

CLICK System	CODE	73NP93121000
	Shape	167

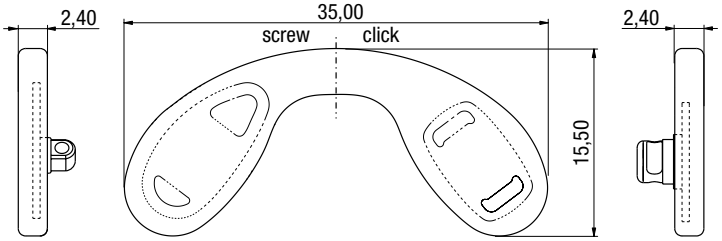

SCREW System	CODE	73NP93124000
	Shape	169

TWIN PAD

CLICK System	CODE	73NP93125000
	Shape	169

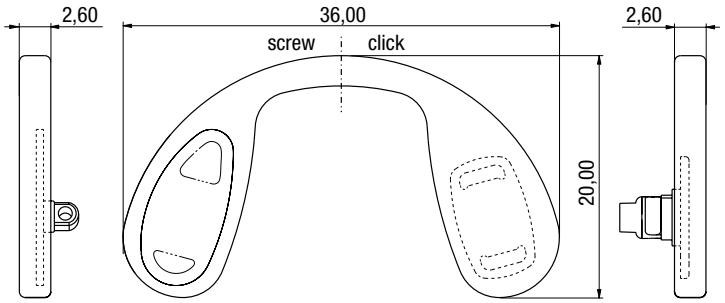

SCREW System	CODE	73NP93119000
	Shape	166

TWIN PAD

CLICK System	CODE	73NP93117000
	Shape	165

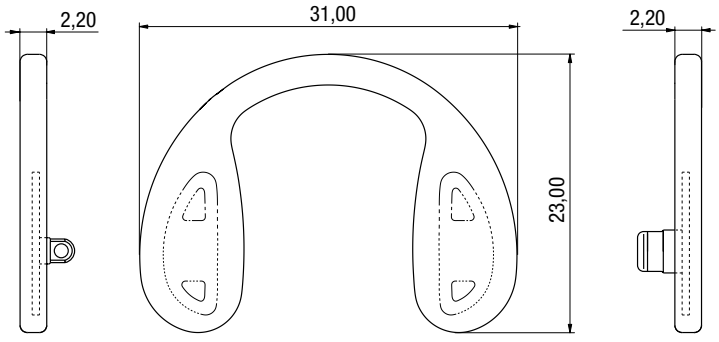

SCREW System	CODE	73NP93128000
	Shape	171

TWIN PAD

CLICK System	CODE	73NP93129000
	Shape	171

All rights reserved · © copyright Visottica · 2018 · Rev.1 - For most updated information, visit our website **www.visotticacomotec.com**

universal plastic insert "U"

Material color: **Crystal Clear**

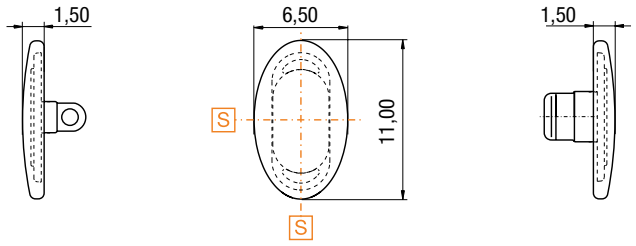

SCREW System	Shape	138
CLICK System	Shape	138

SLIMICONE PAD

Personalizations on insert:
- Personalization range pages 8-9 (except GPI)
- **Not oriented**

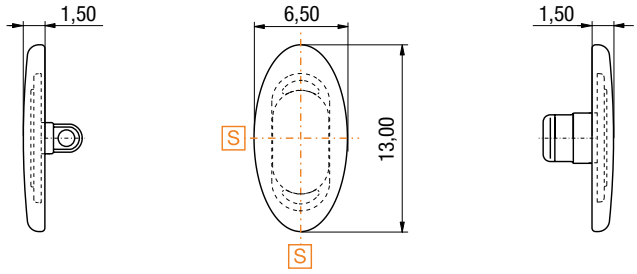

SCREW System	Shape	134
CLICK System	Shape	134

SLIMICONE PAD

Personalizations on insert:
- Personalization range pages 8-9 (except GPI)
- **Not oriented**

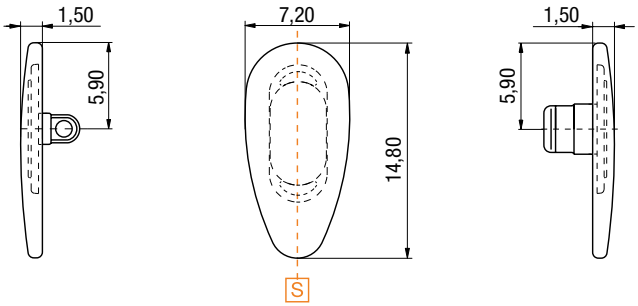

SCREW System	Shape	135
CLICK System	Shape	135

SLIMICONE PAD

Personalizations on insert:
- Personalization range pages 8-9 (except GPI)
- **Not oriented**

All rights reserved · © copyright Visottica · 2018 · Rev.1 - For most updated information, visit our website **www.visotticacomotec.com**

universal plastic insert "U"

Material color: **Crystal Clear**

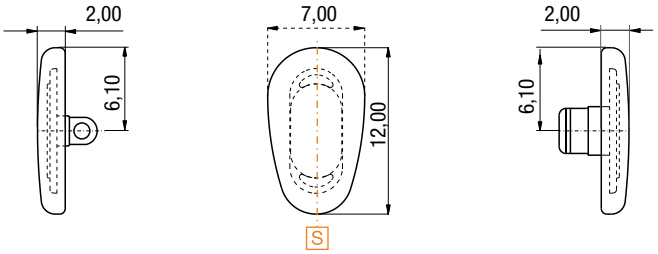

SCREW System	Shape	152
CLICK System	Shape	152

SILICONE PAD

Personalizations on insert:
- Personalization range pages 8-9 (except GPI)
- **Not oriented**

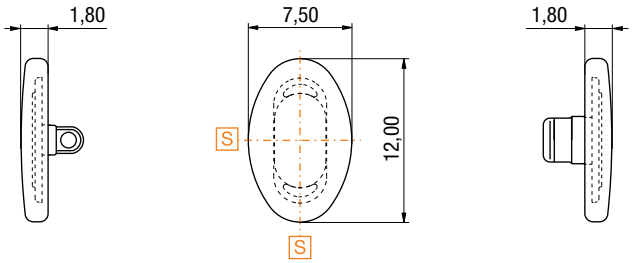

SCREW System	Shape	144
CLICK System	Shape	144

SILICONE PAD

Personalizations on insert:
- Personalization range pages 8-9 (except GPI)
- **Not oriented**

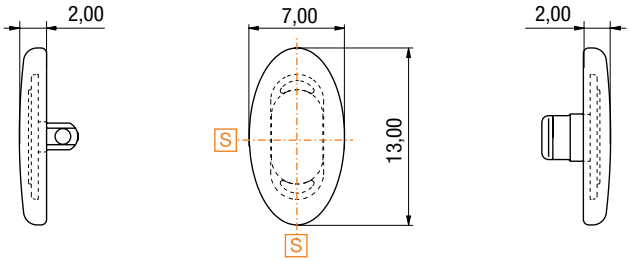

SCREW System	Shape	110
CLICK System	Shape	110

SILICONE PAD

Personalizations on insert:
- Personalization range pages 8-9 (except GPI)
- **Not oriented**

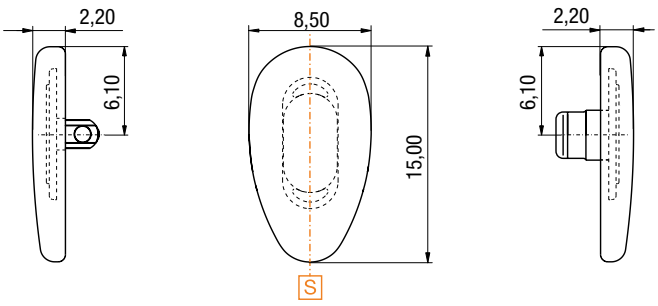

SCREW System	Shape	113
CLICK System	Shape	113

SILICONE PAD

Personalizations on insert:
- Personalization range pages 8-9 (except GPI)
- **Not oriented**

All rights reserved · © copyright Visottica · 2018 · Rev.1 - For most updated information, visit our website **www.visotticacomotec.com**

no insert

Material color: **Crystal Clear**

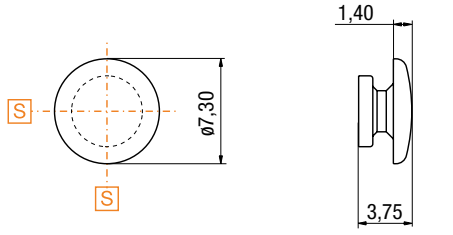

BUTTON System	CODE	73NP91511000
	Shape	131

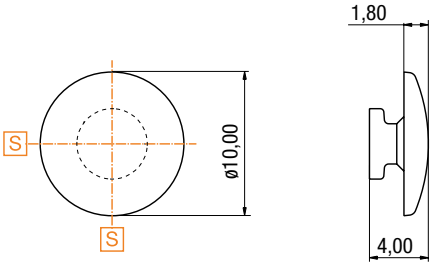

BUTTON System	CODE	73NP91259000
	Shape	128

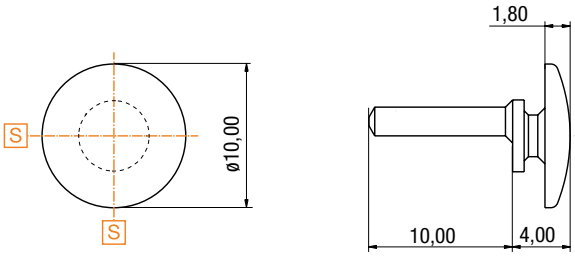

BUTTON System	CODE	73NP93014000
	Shape	128

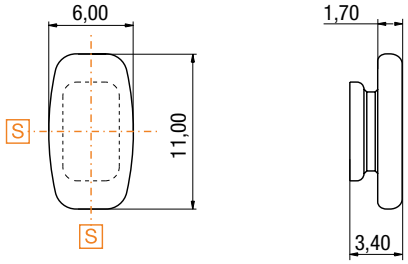

BUTTON System	CODE	73NP93151000
	Shape	139

MATT TRANSPARENT

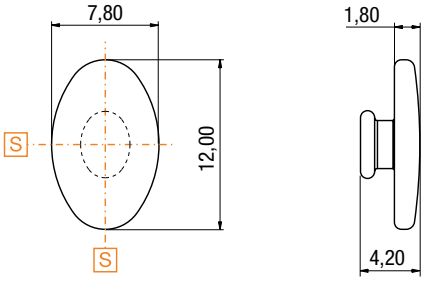

BUTTON System	CODE	73NP93145000
	Shape	143

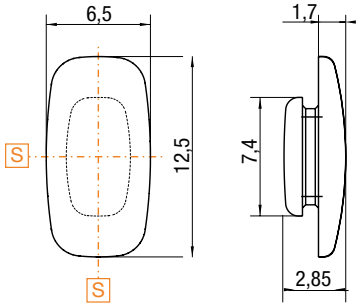

BUTTON System	CODE	73NPB0956A1WYX
	Shape	157

MATT TRANSPARENT

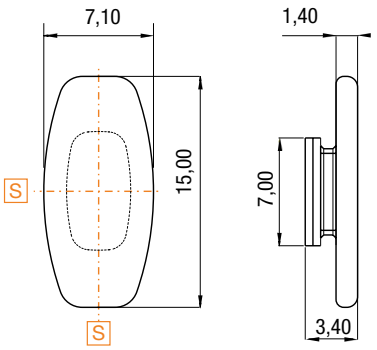

BUTTON System	CODE	73NPB0955A1WYX
	Shape	175

MATT TRANSPARENT

All rights reserved · © copyright Visottica · 2018 · Rev.1 - For most updated information, visit our website **www.visotticacomotec.com**

PAD ARM

PAD ARM CATALOGUE

general information

You can find in this catalog a complete range of padarms for metal and plastic frames, in screw (box and minibox), click, plug'in and button attachment systems.

In the first part you can find all our standard, Level 1, products classified by different materials.

Level 2 is an invitation for "Do it yourself" ! Do your own combination of different standard elements taken out of Level one (a standard attachment combined with a standard stem).

In last part, Level 3, you can find some examples of customised products made under requests.

VISOTTICA SCREW

general information

Stainless Screw for pad arm
Code: 07VI11707A1BYX

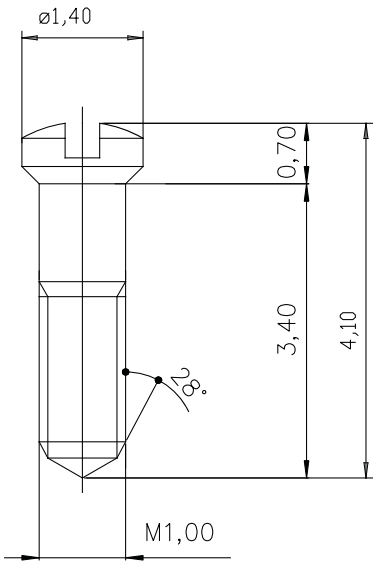

All rights reserved · © copyright Visottica · 2018 · Rev.1 - For most updated information, visit our website **www.visotticacomotec.com**

SYNOPTIC INDEX

MATERIAL	STEM IMAGE	STEM CODE	SCREW System normal box	SCREW System mini box	CLICK System normal buckle
NICKEL SILVER 18% Ni	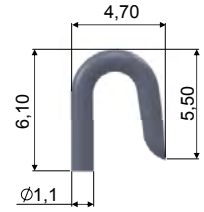	OA7428		03PD91053000 (page 58)	
	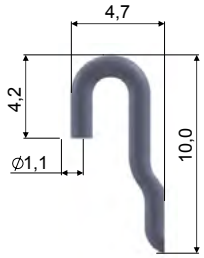	OA7578	03PD90395000 (page 58)	03PD91051000 (page 58)	03PD90516000 (page 58)
	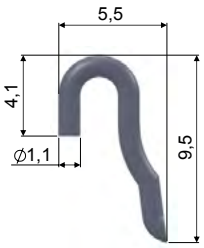	ROA0018	03PD90408000 (page 59)		
	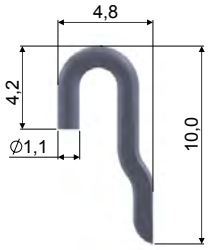	ROA0067	03PD90446000 (page 59)		
	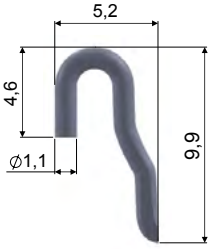	ROA0121	03PD92097000 (page 59)		
	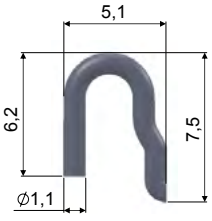	ROA0069			03PD90580000 (page 59)

All rights reserved · © copyright Visottica · 2018 · Rev.1 - For most updated information, visit our website **www.visotticacomotec.com**

MATERIAL	STEM IMAGE	STEM CODE	SCREW System normal box	SCREW System mini box	CLICK System normal buckle
			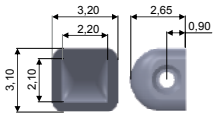	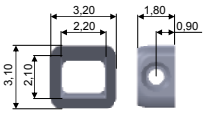	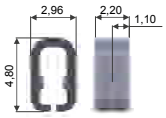
NICKEL SILVER 18% Ni	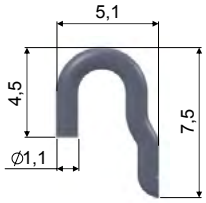	ROA0011		03PD93632000 (page 60)	03PD90829000 (page 60)
	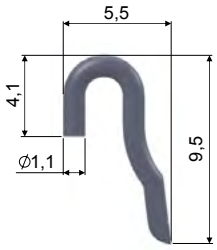	ROA0022	03PD90520000 (page 60)		03PD90479000 (page 60)
	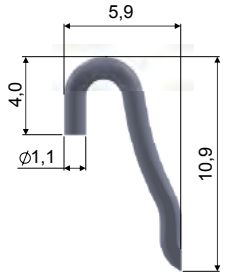	OA7523			03PD91294000 (page 61)
	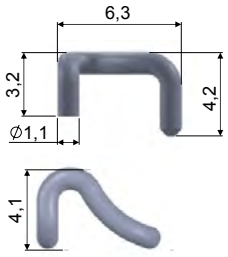	OA7380	03PD90900000 (page 67) 03PD90505000 (page 61)		03PD90701000 (page 61)
	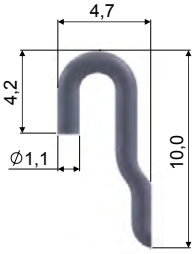	OA7572			03PD92470000 (page 67)

All rights reserved · © copyright Visottica · 2018 · Rev.1 - For most updated information, visit our website **www.visotticacomotec.com**

SYNOPTIC INDEX

MATERIAL	STEM IMAGE	STEM CODE	SCREW System normal box	SCREW System mini box	CLICK System normal buckle
			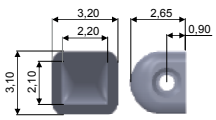	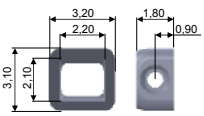	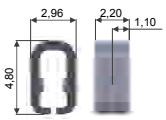
NICKEL SILVER 32% Ni		OA7012	03PD91225000 (page 62)		
	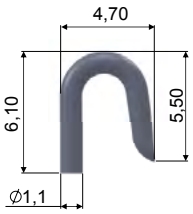	OA7029	03PD90533000 (page 62)		03PD91104000 (page 62)
	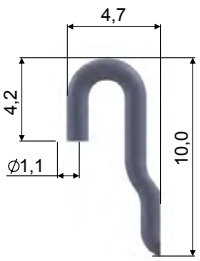	OA7034	03PD90535000 (page 62)		
	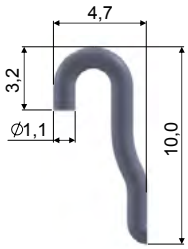	OA7268			03PD90534000 (page 63)
	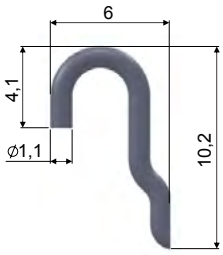	OA7399			03PD91097000 (page 63)
	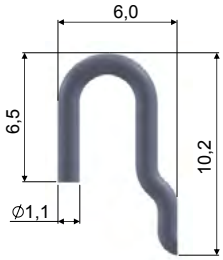	OA7072	03PD90475000 (page 63)		

All rights reserved · © copyright Visottica · 2018 · Rev.1 - For most updated information, visit our website **www.visotticacomotec.com**

MATERIAL	STEM IMAGE	STEM CODE	SCREW System normal box 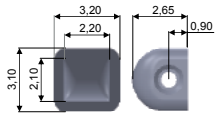	SCREW System mini box 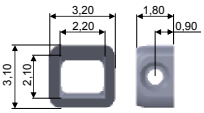	CLICK System normal buckle
NICKEL SILVER 32% Ni	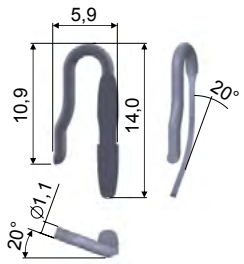	OG7003	03PD91331000 (page 63)		
MONEL	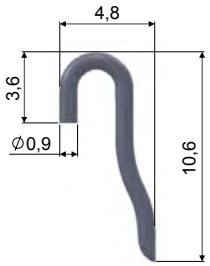	OA7385			18PD90538000 (page 64)
	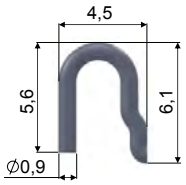	OA7575	18PD91098000 (page 64)		
	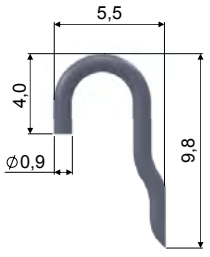	OA7570	18PD90537000 (page 64)		
	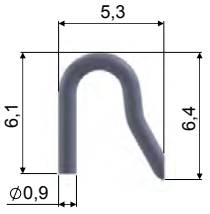	ROA0160			18PDB0231A1B (page 64)
TITANIUM	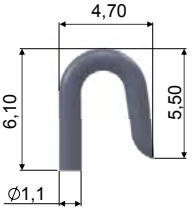	OA7549	31PD90563000 (page 65)		

All rights reserved · © copyright Visottica · 2018 · Rev.1 - For most updated information, visit our website **www.visotticacomotec.com**

SYNOPTIC INDEX

VISOTTICACOMOTEC

MATERIAL	STEM IMAGE	STEM CODE	SCREW System normal box	SCREW System mini box	CLICK System normal buckle
			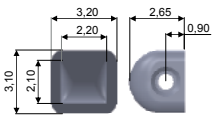	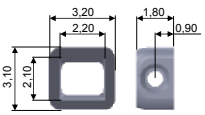	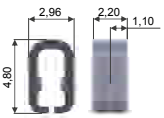
TITANIUM	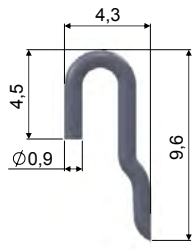	ROA0109	31PD90590000 (page 65)		
	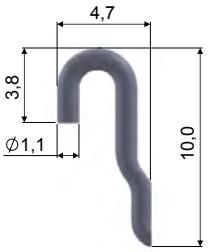	OA7579	31PD90550000 (page 65)	31PD90584000 (page 66)	31PD91283000 (page 65)
	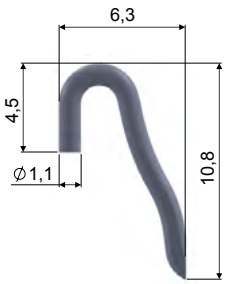	OA7567	31PD90435000 (page 66)		

All rights reserved · © copyright Visottica · 2018 · Rev.1 - For most updated information, visit our website **www.visotticacomotec.com**

STANDARD PROPOSAL - **LEVEL 1**

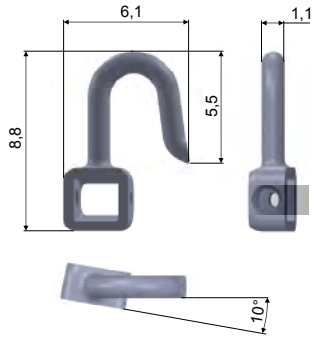

SCREW System	mini box	CODE	03PD91053000

- STEM CODE: **OA7428**
- STEM SHAPE: 207
- STEM ø 1.10
- STEM ALLOY Nickel Silver 18% Ni · CuNi18Zn20
- **MINIBOX**
- MINIBOX ALLOY Nickel Silver 18% Ni · CuNi18Zn20
- SLANTED MINIBOX 10°

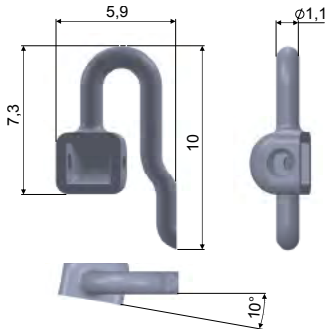

SCREW System	normal box	CODE	03PD90395000

- STEM CODE: **OA7578**
- STEM SHAPE: 214
- STEM ø 1.10
- STEM ALLOY Nickel Silver 18% Ni · CuNi18Zn20
- **NORMAL BOX**
- BOX ALLOY Nickel Silver 18% Ni · CuNi18Zn20
- SLANTED BOX 10°

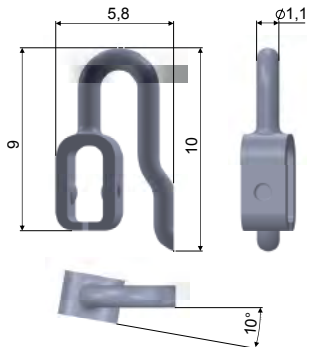

CLICK System	normal buckle	CODE	03PD90516000

- STEM CODE: **OA7578**
- STEM SHAPE: 214
- STEM ø 1.10
- STEM ALLOY Nickel Silver 18% Ni · CuNi18Zn20
- **NORMAL BUCKLE**
- BUCKLE ALLOY · CuNi9Sn6
- BUCKLE 10°

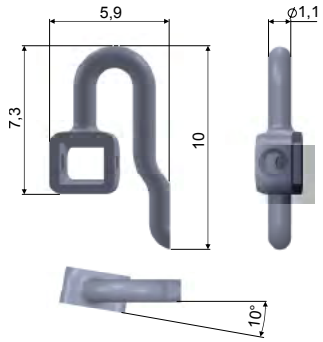

SCREW System	mini box	CODE	03PD91051000

- STEM CODE: **OA7578**
- STEM SHAPE: 214
- STEM ø 1.10
- STEM ALLOY Nickel Silver 18% Ni · CuNi18Zn20
- **MINIBOX**
- MINIBOX ALLOY Nickel Silver 18% Ni · CuNi18Zn20
- SLANTED MINIBOX 10°

All rights reserved · © copyright Visottica · 2018 · Rev.1 - For most updated information, visit our website **www.visotticacomotec.com**

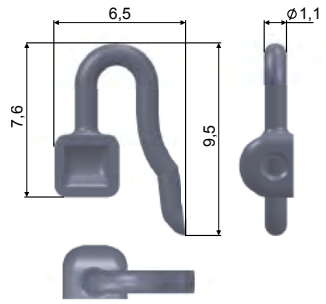

SCREW System | normal box | CODE | **03PD90408000**

- STEM CODE: **ROA0018**
- STEM SHAPE: 214
- STEM ø 1.1
- STEM ALLOY Nickel Silver 18% Ni · CuNi18Zn20
- **NORMAL BOX**
- BOX ALLOY Nickel Silver 18% Ni · CuNi18Zn20

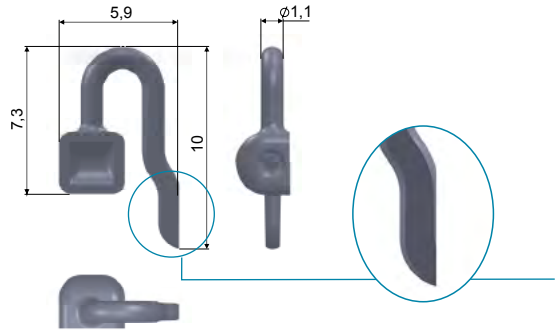

SCREW System | normal box | CODE | **03PD90446000**

- STEM CODE: **ROA0067**
- STEM SHAPE: 214
- STEM ø 1.10
- STEM ALLOY Nickel Silver 18% Ni · CuNi18Zn20
- **NORMAL BOX**
- BOX ALLOY Nickel Silver 18% Ni · CuNi18Zn20
- **STAMPED STEM** 0.7 mm AT THE END

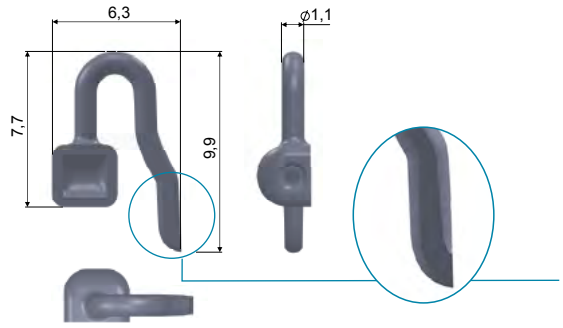

SCREW System | normal box | CODE | **03PD92097000**

- STEM CODE: **ROA0121**
- STEM SHAPE: 214
- STEM ø 1.10
- STEM ALLOY Nickel Silver 18% Ni · CuNi18Zn20
- **NORMAL BOX**
- BOX ALLOY Nickel Silver 18% Ni · CuNi18Zn20
- **STAMPED STEM** 0.9 mm AT THE END

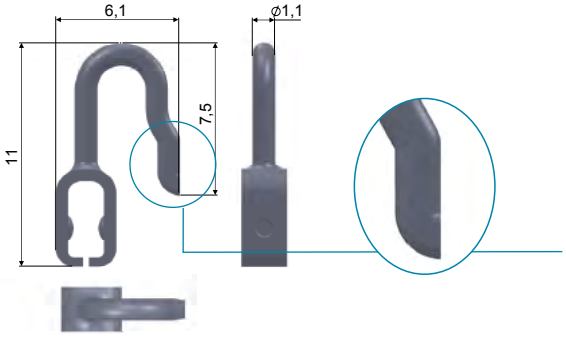

CLICK System | normal buckle | CODE | **03PD90580000**

- STEM CODE: **ROA0069**
- STEM SHAPE: 214
- STEM ø 1.10
- STEM ALLOY Nickel Silver 18% Ni · CuNi18Zn20
- **NORMAL BUCKLE**
- BUCKLE ALLOY · CuNi9Sn6
- **STAMPED STEM** 0.9 mm AT THE END

All rights reserved · © copyright Visottica · 2018 · Rev.1 - For most updated information, visit our website **www.visotticacomotec.com**

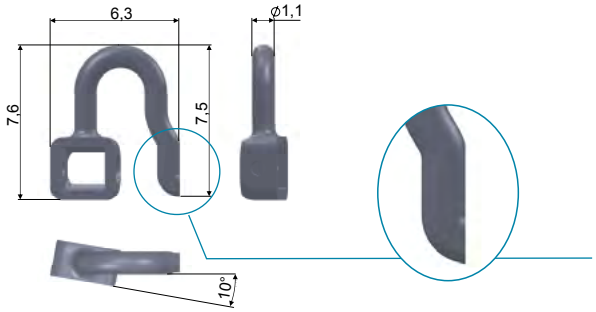

SCREW System	mini box	CODE	03PD93632000

- STEM CODE: **ROA0011**
- STEM SHAPE: 214
- STEM ø 1.10
- STEM ALLOY Nickel Silver 18% Ni · CuNi18Zn20
- **MINIBOX**
- BOX ALLOY Nickel Silver 18% Ni · CuNi18Zn20
- SLANTED BOX 10°
- **STAMPED STEM** 0.9 AT THE END

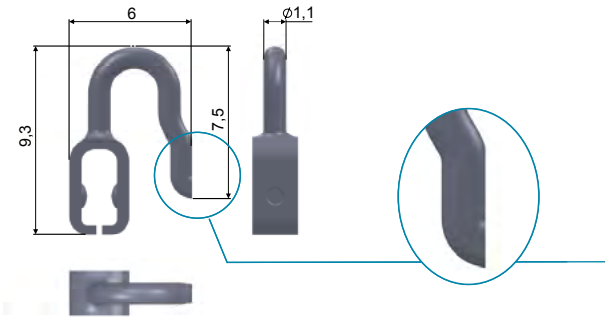

CLICK System	normal buckle	CODE	03PD90829000

- STEM CODE: **ROA0011**
- STEM SHAPE: 214
- STEM ø 1.10
- STEM ALLOY Nickel Silver 18% Ni · CuNi18Zn20
- **NORMAL BUCKLE**
- BUCKLE ALLOY · CuNi9Sn6
- **STAMPED STEM** 0.9 AT THE END

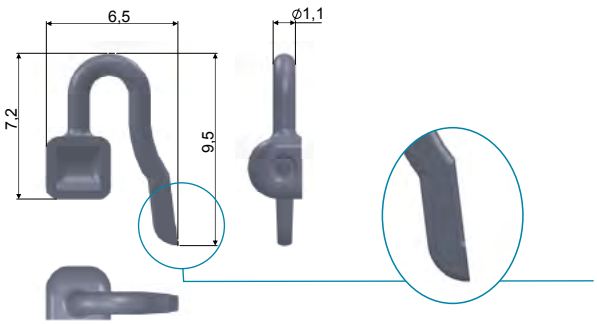

SCREW System	normal box	CODE	03PD90520000

- STEM CODE: **ROA0022**
- STEM SHAPE: 214
- STEM ø 1.10
- STEM ALLOY Nickel Silver 18% Ni · CuNi18Zn20
- **NORMAL BOX**
- BOX ALLOY Nickel Silver 18% Ni · CuNi18Zn20
- **STAMPED STEM** 0.7 AT THE END

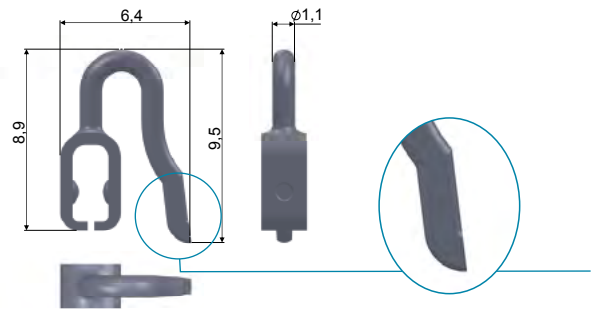

CLICK System	normal buckle	CODE	03PD90479000

- STEM CODE: **ROA0022**
- STEM SHAPE: 214
- STEM ø 1.10
- STEM ALLOY Nickel Silver 18% Ni · CuNi18Zn20
- **NORMAL BUCKLE**
- BUCKLE ALLOY · CuNi9Sn6
- **STAMPED STEM** 0.7 AT THE END

All rights reserved · © copyright Visottica · 2018 · Rev.1 - For most updated information, visit our website **www.visotticacomotec.com**

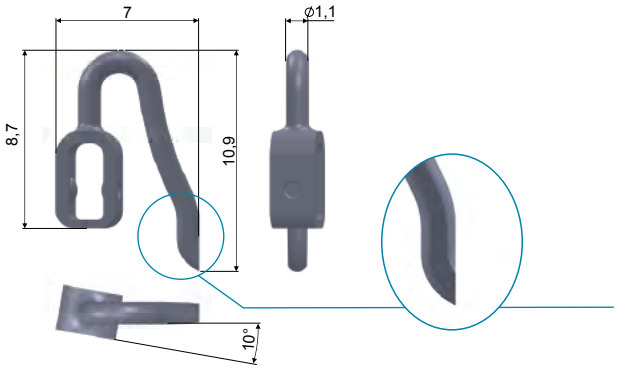

CLICK System	normal buckle	CODE	03PD91294000

- STEM CODE: **OA7523**
- STEM SHAPE: 225
- STEM ø 1.1
- STEM ALLOY Nickel Silver 18% Ni · CuNi18Zn20
- **NORMAL BUCKLE**
- BUCKLE ALLOY · CuNi9Sn6
- SLANTED BUCKLE 10°
- **STAMPED STEM** 0.9 AT THE END

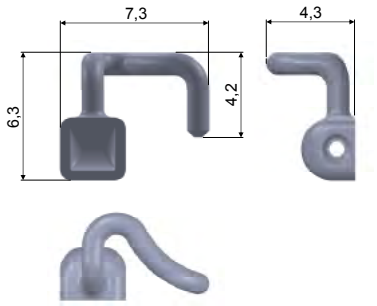

SCREW System	normal box	CODE	03PD90505000

- STEM CODE: **OA7380**
- STEM SHAPE: 310
- STEM ø 1.1
- STEM ALLOY Nickel Silver 18% Ni · CuNi18Zn20
- **NORMAL BOX**
- BOX ALLOY Nickel Silver 18% Ni · CuNi18Zn20
- 3D SHAPE

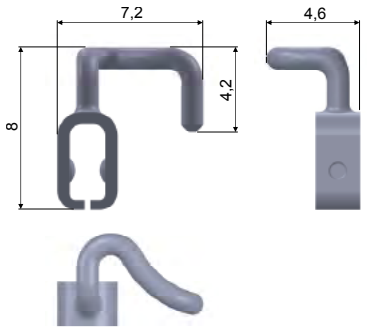

CLICK System	normal buckle	CODE	03PD90701000

- STEM CODE: **OA7380**
- STEM SHAPE: 310
- STEM ø 1.1
- STEM ALLOY Nickel Silver 18% Ni · CuNi18Zn20
- **NORMAL BUCKLE**
- BUCKLE ALLOY · CuNi9Sn6
- 3D SHAPE

All rights reserved · © copyright Visottica · 2018 · Rev.1 - For most updated information, visit our website **www.visotticacomotec.com**

SCREW System	normal box	CODE	03PD91225000

- STEM CODE: **OA7012**
- STEM SHAPE: 203
- STEM ø 1.10
- STEM ALLOY Nickel Silver 32% Ni · CuNi32Zn9
- **NORMAL BOX**
- BOX ALLOY Nickel Silver 18% Ni · CuNi18Zn20

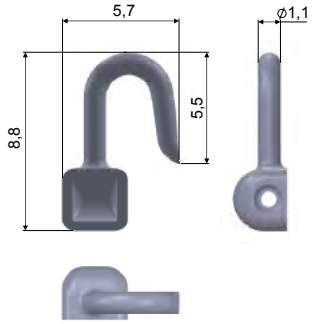

SCREW System	normal box	CODE	03PD90533000

- STEM CODE: **OA7029**
- STEM SHAPE: 207
- STEM ø 1.10
- STEM ALLOY Nickel Silver 32% Ni · CuNi32Zn9
- **NORMAL BOX**
- BOX ALLOY Nickel Silver 18% Ni · CuNi18Zn20

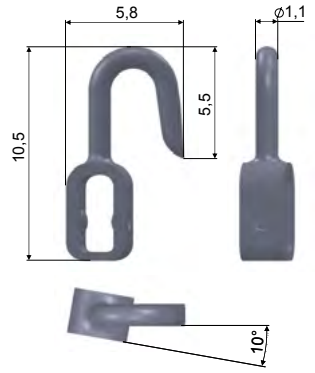

CLICK System	normal buckle	CODE	03PD91104000

- STEM CODE: **OA7029**
- STEM SHAPE: 207
- STEM ø 1.10
- STEM ALLOY Nickel Silver 32% Ni · CuNi32Zn9
- **NORMAL BUCKLE**
- BUCKLE ALLOY · CuNi9Sn6
- SLANTED BUCKLE 10°

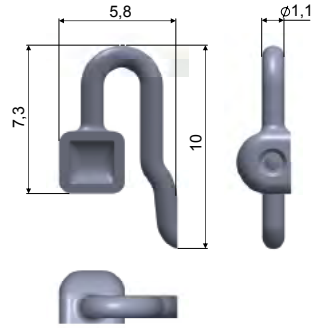

SCREW System	normal box	CODE	03PD90535000

- STEM CODE: **OA7034**
- STEM SHAPE: 214
- STEM ø 1.10
- STEM ALLOY Nickel Silver 32% Ni · CuNi32Zn9
- **NORMAL BOX**
- BOX ALLOY Nickel Silver 18% Ni · CuNi18Zn20

All rights reserved · © copyright Visottica · 2018 · Rev.1 - For most updated information, visit our website **www.visotticacomotec.com**

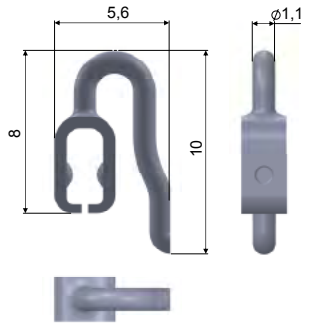

CLICK System	normal buckle	CODE	03PD90534000

- STEM CODE: **OA7268**
- STEM SHAPE: 214
- STEM ø 1.10
- STEM ALLOY Nickel Silver 32% Ni · CuNi32Zn9
- **NORMAL BUCKLE**
- BUCKLE ALLOY · CuNi9Sn6

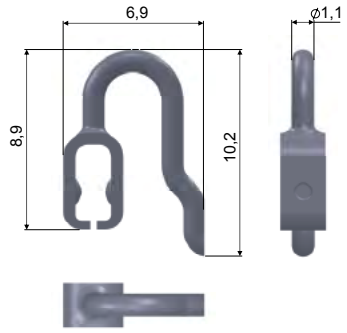

CLICK System	normal buckle	CODE	03PD91097000

- STEM CODE: **OA7399**
- STEM SHAPE: 214
- STEM ø 1.10
- STEM ALLOY Nickel Silver 32% Ni · CuNi32Zn9
- **NORMAL BUCKLE**
- BUCKLE ALLOY · CuNi9Sn6

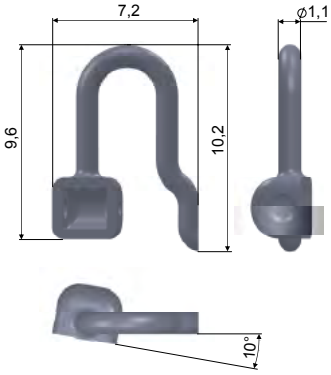

SCREW System	normal box	CODE	03PD90475000

- STEM CODE: **OA7072**
- STEM SHAPE: 214
- STEM ø 1.1
- STEM ALLOY Nickel Silver 32% Ni · CuNi32Zn9
- **NORMAL BUCKLE**
- BOX ALLOY Nickel Silver 18% Ni · CuNi18Zn20
- SLANTED BOX 10°

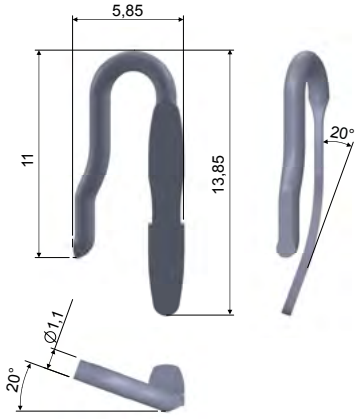

PLUG-IN System		CODE	03PD91331000

- STEM CODE: **OG7003**
- STEM SHAPE: PLUG IN
- STEM ø 1.10
- STEM ALLOY Nickel Silver 32% Ni · CuNi32Zn9
- **PLUG IN PAD ARM**
- SLANTED ANGLE 20°

All rights reserved · © copyright Visottica · 2018 · Rev.1 - For most updated information, visit our website **www.visotticacomotec.com**

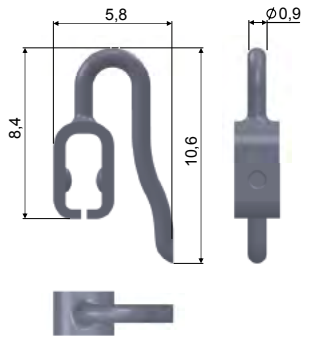

CLICK System | normal buckle | CODE | 18PD90538000

- STEM CODE: **OA7385**
- STEM SHAPE: 214
- STEM ø 0.9
- STEM ALLOY Monel NiCu30Fe
- **NORMAL BUCKLE**
- BUCKLE ALLOY CuNi9Sn6

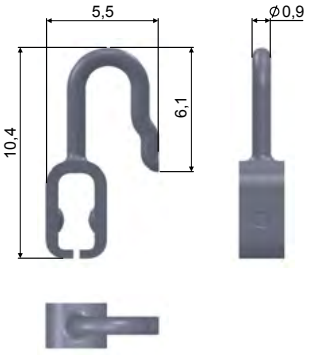

CLICK System | normal buckle | CODE | 18PD91098000

- STEM CODE: **OA7575**
- STEM SHAPE: 214
- STEM ø 0.90
- STEM ALLOY Monel NiCu30Fe
- **NORMAL BUCKLE**
- BUCKLE ALLOY CuNi9Sn6

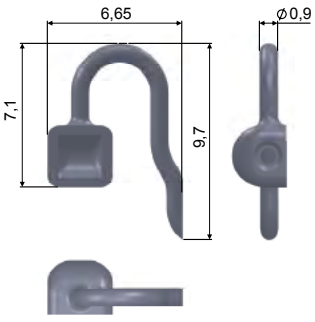

SCREW System | normal box | CODE | 18PD90537000

- STEM CODE: **OA7570**
- STEM SHAPE: 214
- STEM ø 0.9
- STEM ALLOY Monel NiCu30Fe
- **NORMAL BOX**

BOX ALLOY CuNi18Zn20

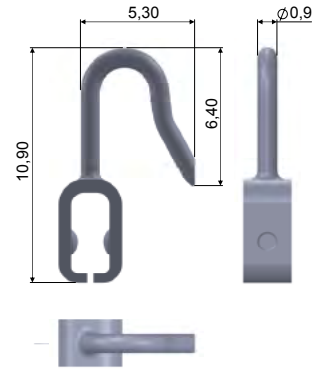

CLICK System | normal buckle | CODE | 18PDB0231A1BYX

- STEM CODE: **ROA0160**
- STEM SHAPE: 225
- STEM ø 0.9
- STEM ALLOY Monel NiCu30Fe
- **NORMAL BUCKLE**
- BUCKLE ALLOY CuNi9Sn6

All rights reserved · © copyright Visottica · 2018 · Rev.1 - For most updated information, visit our website **www.visotticacomotec.com**

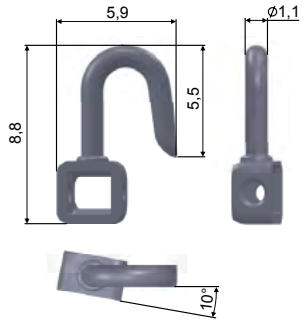

SCREW System	mini box	CODE	31PD90563000

- STEM CODE: **OA7549**
- STEM SHAPE: 207
- STEM ø 1.10
- STEM ALLOY TITANIUM
- **MINIBOX**
- MINIBOX ALLOY TITANIUM
- SLANTED MINIBOX 10°

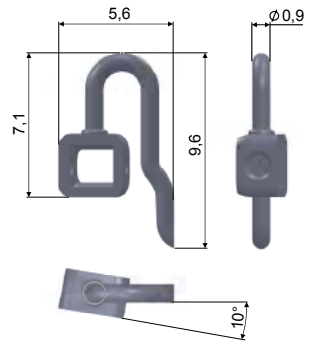

SCREW System	mini box	CODE	31PD90590000

- STEM CODE: **ROA0109**
- STEM SHAPE: 214
- STEM ø 0.9
- STEM ALLOY TITANIUM
- **MINIBOX**
- MINIBOX ALLOY TITANIUM
- SLANTED MINIBOX 10°

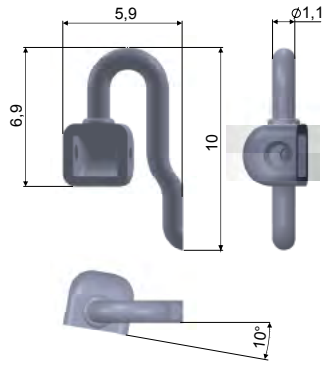

SCREW System	normal box	CODE	31PD90550000

- STEM CODE: **OA7579**
- STEM SHAPE: 214
- STEM ø 1.1
- STEM ALLOY TITANIUM
- **NORMAL BOX**
- BOX ALLOY TITANIUM
- SLANTED BOX 10°

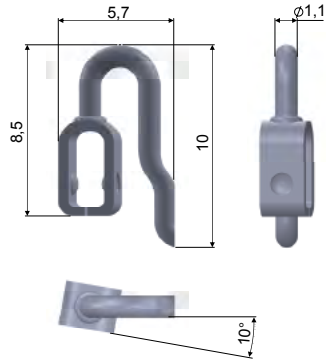

CLICK System	normal buckle	CODE	31PD91283000

- STEM CODE: **OA7579**
- STEM SHAPE: 214
- STEM ø 1.1
- STEM ALLOY TITANIUM
- **NORMAL BUCKLE**
- BUCKLE ALLOY TITANIUM
- SLANTED BOX 10°

All rights reserved · © copyright Visottica · 2018 · Rev.1 - For most updated information, visit our website **www.visotticacomotec.com**

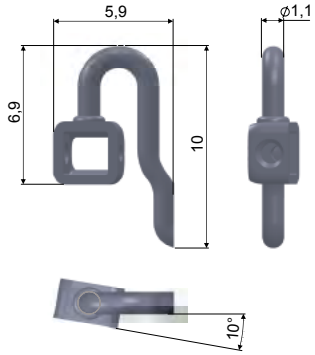

SCREW System	mini box	CODE	31PD90584000

- STEM CODE: **OA7579**
- STEM SHAPE: 214
- STEM ø 1.10
- STEM ALLOY TITANIUM
- **MINIBOX**
- MINIBOX ALLOY TITANIUM
- SLANTED MINIBOX 10°

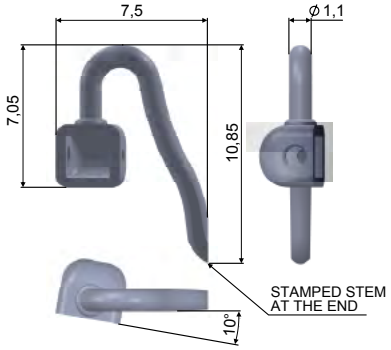

SCREW System	normal box	CODE	31PD90435000

- STEM CODE: **OA7567**
- STEM SHAPE: 225
- STEM ø 1.1
- STEM ALLOY TITANIUM
- **NORMAL BOX**
- BOX ALLOY TITANIUM
- SLANTED MINIBOX 10°
- STAMPED STEM 0.9 AT THE END

All rights reserved · © copyright Visottica · 2018 · Rev.1 - For most updated information, visit our website **www.visotticacomotec.com**

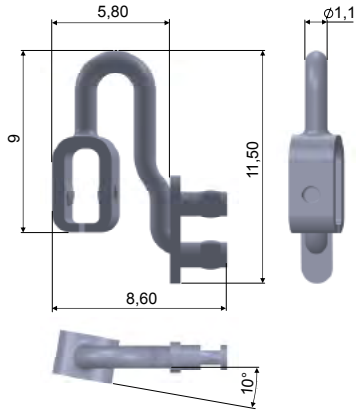

CLICK System | normal buckle | **CODE** | **03PD92470000**

- STEM CODE: **OA7572**
- STEM SHAPE: 214
- STEM ø 1.10
- STEM ALLOY CuNi18Zn20
- **NORMAL BUCKLE**
- BUCKLE ALLOY · CuNi9Sn6
- SLANTED ANGLE 10°
- FOR PLASTIC FRAMES

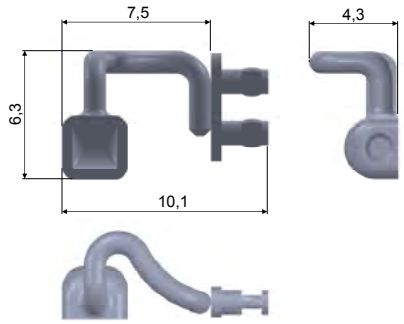

SCREW System | normal box | **CODE** | **03PD90900000**

- STEM CODE: **OA7380**
- STEM SHAPE: 310
- STEM ø 1.1
- STEM ALLOY Nickel Silver 18% Ni · CuNi18Zn20
- **NORMAL BOX**
- BOX ALLOY Nickel Silver 18% · CuNi18Zn20
- FOR PLASTIC FRAMES
- 3D SHAPE

All rights reserved · © copyright Visottica · 2018 · Rev.1 - For most updated information, visit our website **www.visotticacomotec.com**

D O I T Y O U R S E L F - **L E V E L 2**

LEVEL 2 DO IT YOURSELF

do your own combination of different standard elements

1 choose your material of stem

- NICKEL SILVER 18% Ni
- NICKEL SILVER 32% Ni
- MONEL
- TITANIUM

2 choose your system

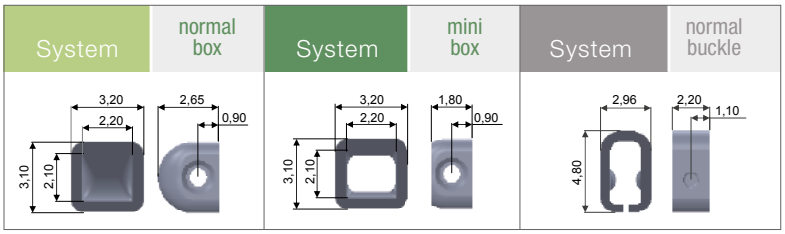

3 choose your stem code

You can find STANDARD STEM (material and shape) in the Synoptic Index from page XX to page XX

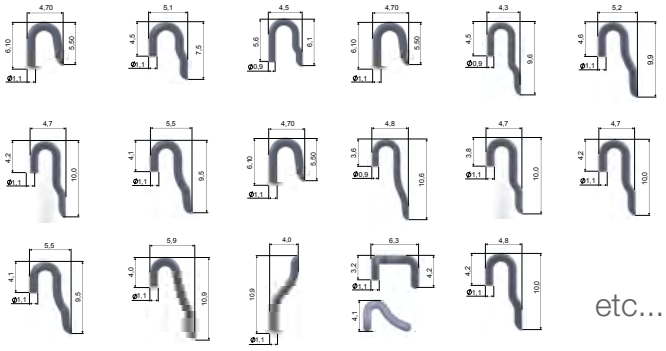

AN EXAMPLE OF POSSIBLE COMBINATION

NICKEL SILVER 18%

+

ROA0069

+

SCREW System | mini box

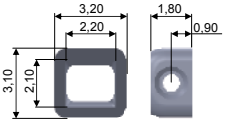

All rights reserved · © copyright Visottica · 2018 · Rev.1 - For most updated information, visit our website **www.visotticacomotec.com**

FEATURED PRODUCTS - **LEVEL 3**

LEVEL 3 FEATURED PRODUCTS

Examples of customized products

EXAMPLE 1

EXAMPLE 2

EXAMPLE 3

EXAMPLE 4

EXAMPLE 5

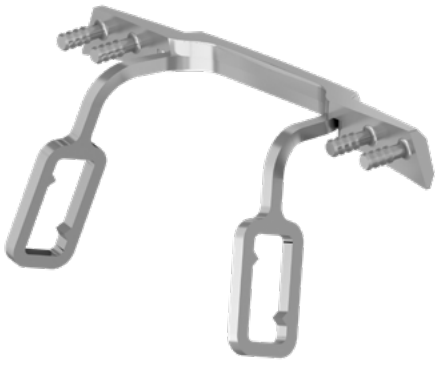

EXAMPLE 6

All rights reserved · © copyright Visottica · 2018 · Rev.1 - For most updated information, visit our website **www.visotticacomotec.com**

LEVEL 3 FEATURED PRODUCTS

Examples of customized products

EXAMPLE 7

EXAMPLE 8

EXAMPLE 9

EXAMPLE 10

EXAMPLE 11

EXAMPLE 12

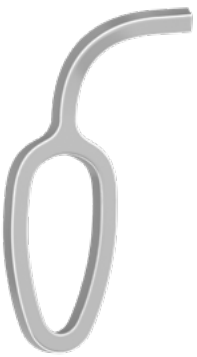

All rights reserved · © copyright Visottica · 2018 · Rev.1 - For most updated information, visit our website **www.visotticacomotec.com**

www.visotticacomotec.com

COMFORT FOR THE VISION · 2018

Visottica Industrie S.p.a.
Via Vecchia Trevigiana, 11
31058 Susegana
(Treviso), Italy
Tel +39 0438 6551
Fax +39 0438 450 855
sales@visotticacomotec.com

O'Reilly Industrial Ltd.
Rm 302, Shui Hing Centre,
13 Sheung Yuet Road,
Kowloon Bay, Kowloon, Hong Kong
Tel +852 2796 6010
Fax +852 2796 4631
sales@visotticacomotec.hk

COMOTEC Optical Products (Dongguan) Ltd.
No. 20, WeiJian Road,
WeiJian Industrial Park,
ChaShan Town, Dongguan City
Guangdong Province, China 523380
Tel +86 769 8233 9955
Fax +86 769 8233 9977